ADDENDUM #1

1.1 PROJECT INFORMATION

A. Project Number: 15-STA-512
B. Project Title: Plaza Upgrade
C. Project Location: 701 W. Riverside Ave, Spokane, WA
D. Owner: Spokane Transit Authority

1.2 NOTICE TO BIDDERS

A. The following clarifications, changes, additions, and/or deletions are considered as **Addendum #1** and are hereby made a party of the contract documents. All bidders are required to base their bid upon the information furnished in this addendum and as required in the contract documents. The Contractor is required to acknowledge **Addendum #1** in their company proposal. Failure to acknowledge addendum on the bid form will result in the bid proposal being declared non-responsive.
B. The Bidder shall acknowledge receipt of this Addendum in the appropriate space on the Bid Form.
C. All communications shall be directed to Jessica Charlton as listed in the bid documents at jcharlton@spokanetransit.com or by telephone at 509-325-6049.

1.3 CLARIFICATIONS / GENERAL

A. Permit drawings (City of Spokane, #B1508401BLDC) are in the last stages of approval and will be issued prior to notice to proceed. The awarded Contractor is to pick up the permit set of drawings and pay the remaining balance of approximately $6,784.95 to the City of Spokane. Contractor may submit this invoice to STA for reimbursement without contractor markup. Refer to STA Instructions to Contractors Submitting Bids, Section 1.11(B) for additional information.
B. This project is locally funded. All Washington State Wage requirements and provisions/clauses apply.
C. Portions of this project qualify as “public road construction” as described in Rule 171, WAC 458-171

1.4 REVISIONS TO PLANS AND SPECIFICATIONS SECTIONS

In the Specification:

1.	Table of Contents	REVISE the Table of Contents to read "DIVISION 14: CONVEYING EQUIPMENT".
2.	Table of Contents	DELETE Sections 054000, 061000, 071413, 072600, 074243, 089119, 099113, and 123640 from the Table of Contents
3.	033543 Polished	REPLACE the Section in its' entirety with the attached:
4.	054000 Cold-Formed	DELETE the Section in its' entirety.
5.	061000 Rough Carpentry	DELETE the Section in its' entirety.
6.	061600 Sheathing	REPLACE the Sections in its' entirety with the attached.
7.	071413 Hot-Fluid	DELETE the Section in its' entirety.
8.	072600 Vapor Retarders	DELETE the Section in its' entirety.
9.	089119 Fixed Louvers	DELETE the Section in its' entirety.
10.	090001 Finish Legend	See REVISED first page of Finish Legend to include "CON-4" and "CON-5".
11.	090000 Finish Schedule	REPLACE the Section in its' entirety with the attached.
12.	099113 Exterior Painting	DELETE the Section in its' entirety.
13.	115000 Equipment	REVISE the Section number in the footer with "11500 - page#"
14.	123640 Stone Countertops	DELETE the Section in its' entirety.

In the Drawings:

1.	Sheets AD-102	General Notes: Delete Note #2 in its' entirety.
2.	Sheets AD-111	General Notes: Delete Note #2 in its' entirety.
3.	Sheet AD-111, Entry P-117	DELETE note that reads: "SALVAGE ALL DOORS FOR REINSTALLATION".
4.	Sheets AD-112	General Notes: Delete Note #2 in its' entirety.
5.	Sheets AD-121	General Notes: Delete Note #2 in its' entirety.
6.	Sheet AD-121, Atri-um P-116	DELETE instances of Keynote D29 along Atrium perimeter.
7.	Sheets AD-122	General Notes: Delete Note #2 in its' entirety.
8.	Sheets AD-211	General Notes: Delete Note #2 in its' entirety.
9.	Sheets AD-301	General Notes: Delete Note #2 in its' entirety.
10.	Sheet A-112	See Revision A-01.
11.	Sheet A-201, Exterior Materials Legend	REVISE "Frosted Glazing" to read "Low E Insulated Glazing per specifications".
12.	Sheet A-251	See Revision A-02.
13.	Sheet A-252, Detail 6	REVISE signage over Door to read "ZONES 6-10" "SPRAGUE AVENUE".
14.	Sheet A-253	See Revision A-03.
15.	Sheet A-253, Detail 1	DELETE note "CPU HANGAR".
16.	Sheet A-253, Detail 2	REVISE note to read "UNDER COUNTER KEYBOARD TRAYS". DELETE the term "(NIC)".
17.	Sheet A-253, Detail 9	ADD dimension to partial height wall reading, "4'-0".
18.	Sheet A-253, Detail 12	ADD dimension to counter reading, "2'-10".
19.	Sheet A-401	See Revision A-04.
20.	Sheet A-402	See Revisions A-05, A-06, A-10, & A-11.
21.	Sheet A-402, Detail C-3	ADD note "SEE ELECTRICAL DRAWINGS FOR MORE INFORMATION".
22.	Sheet A-402, Entire Sheet	REVISE all instances of notations reading as "CONC-1" to correctly be "CON-1".
23.	Sheet A-402, Entire Sheet	REVISE all instances of notations reading as "CONC-2" to correctly be "CON-2".
24.	Sheet A-402, Entire Sheet	REVISE all instances of notations reading as "CONC-3" to correctly be "CON-3".
25.	Sheet A-411	REPLACE Sheet A-411 in its' entirety, with attached.

26.	Sheet A-503, Detail B-6	ADD note that tile base at toe kick reading, “CTB-1”.
27.	Sheet A-551, Detail A-4	REVISE vertical, height dimension to read, “5’-10” or SEE ELEVATION”.
28.	Sheet A-553, Detail D-2	REVISE sign to read “ZONES 6-10” “SPRAGUE AVENUE”.
29.	Sheet A-721	See Revisions A-08 & A-09.
30.	Sheet A-303, Detail D1	See Revision A-13
31.	Sheet S-111; Sheet S-501,detail A2 & A3	ADD details for Male & Female Cougar Statues; reference sketches S-02 & S-11
32.	Sheet S-111; Sheet S-121, detail B6; Sheet S-201, detail B6, A3, A5 & A6; Sheet S-501, detail A1, A5 & A6	ADD framing and details for Customer Service Area; reference sketches S-01, S-03, S-06, S-07, S-08, S-09, S-10, & S-12
33.	Sheet S-111	W12x26 was W12x22, typ (3) places at Clock Tower; reference sketch S-01
34.	Sheet S-131	ADD note “All condensing unit piping to be core drilled.”
35.	Sheet S-201, detail D1, D5, & D6	REVISE Clock Tower framing to chevron configuration at all bays; reference sketches S-04 & S-05
36.	Sheet E-102	Changed luminaire type between clouds to RJj1, refer to sketch E-01
37.	Sheet E-102	Changed luminaire type at entrance to restrooms, changed luminaire types for refer to sketch E-02
38.	Sheet E-102	Defined Elevator wall luminaire type, Refer to sketch E-03
39.	Sheet E-103	Changed luminaire type for Rm P225 AND Rm P218. Refer to sketch E-04
40.	Sheet E-103	Removed luminaire type for flag feature. Refer to sketch E-05.
41.	Sheet E-103	Changed luminaire type for high ceiling area in Rm P260 and P263. Refer to sketch E-06.
42.	Sheet E-103	Changed luminaire type in Hall P271. Refer to sketch E-07
43.	Sheet E-112	Add Junction boxes and raceway for future video screens. Refer to sketch E-08. Verify junction box height with architectural elevations.
44.	Sheet E-112	Add (2) junction boxes and raceway for future video screen. Refer to Sketch E-09. Verify junction box location with architect prior to rough in.

45.	Sheet E-112	Add a second equipment connection for hand dryers in both restrooms P140 and P141. Refer to sketch E-10.
46.	Sheet E-701	Revised Part # for luminaire type R.A1 to reflect 2000 lumen output. Revised part # 2VTL2-20L-ADP-EZ1-LP835.
47.	Sheet E-701	Added luminaire type R.A2. R.A2 is the same as R.A1 except 4000 lumen output. Part # 2VTL2-40L-ADP-EZ1-LP835.
48.	Sheet E-701	S.B1 changed as follows: Manufacture - Luminii, Part number - F-24-35K-HO-F-NB-* Description - SURFACE LED LOW-PROFILE LED, 1.38"x1.38" REMOVE WOOD SLOT WHERE LUMINAIRE IS INSTALLED ON PLANS. CENTER LUMINAIRE IN SPACE CREATED. VERIFY FINISH WITH ARCHITECT PRIOR TO ORDERING. PROVIDE 277V POWER SUPPLY.
49.	Sheet E-701	W.G1 changed as follows: Manufacture – Visa, Part number - CB5406PSX-RGB-DMX Description - LOW PROFILE RGB LUMINAIRE, 1/8" THICK ACRYLIC LENS, REMOTE POWER SUPPLY IN CASEWORK AT BOTTOM OF ELEVATOR WALL, DMX CONTROL FOR COLOR CHANGING, PROVIDE 50' FACTORY INSTALLED CABLING FOR POWER AND DMX CONTROL.

Substitution Requests:

1.	Spec Section 224000: Plumbing Fixtures	Accepted: Sloan fixtures and faucets from Keller Supply Company. See attached.
2.	Spec Section 224000: Plumbing Fixtures	Accepted: Kohler fixture for Service Sink P4-1 from Keller Supply Company. See attached.
3.	Spec Section 238100: Split-System Air Conditioners	Accepted: LG manufacture from Mechanical Sales, Inc. See attached.
4.	Spec Section 271300: Communication Backbone Wiring	Accepted: Optical Cable Corp (OCC)
5.	Spec Section 271500: Communication Horizontal Cabling	Accepted: Optical Cable Corp (OCC)

1.5 QUESTIONS / ANSWERS (from the Pre-Bid Meeting, Emails, and Phone Calls)

Questions/Answers

Question 01: *What is the Engineers Estimate?*
Answer 01: Estimated range = $2.8M-$3.6M

Question 02: *What do we do about deliveries?*
Answer 02: Deliveries are anticipated to be brought in off of Wall Street. This must be coordinated with STA in order to maintain operations.

Question 03: *Are there staging areas for the project?*
Answer 03: Please see the project phasing and staging areas. Areas are shown in the basement, on the east side of the building and near the Wall Street entrance. Staging areas on the interior of the building may also be identified based on construction layout and schedule however will be the responsibility of the Contractor to determine and obtain approval from/coordinate with STA's project manager.

Question 04: *Is there contractor parking on site?*
Answer 04: Please refer to the project plans for phasing and staging areas. An area in the basement has been identified for contractor use. Parking needs in excess of what is shown in the plans is the responsibility of the Contractor and will need to be located off site.

Question 05: *Will STA move items stored in areas that are affected by the work?*
Answer 05: STA will move stowed items if determined to be in the way of construction. Contractor must coordinate with STA's project manager a minimum of 24 hours in advance.

Question 06: *Can equipment, materials, etc. be brought up with the elevator?*
Answer 06: Any equipment, materials, etc. that does not exceed the 3,000-lb capacity of the elevator may be transported from floor to floor via the elevator. Due to the existing escalators being removed and replaced as part of this project, it is anticipated that public use of the elevators will increase. For this reason, at this time STA has not dedicated a car for contractor use. If an elevator car is used by the contractor the walls and floors must be protected. Any damage resulting from contractor negligence will be the responsibility of the contractor at his/her expense.

Question 07: *It was stated that noise must be kept to acceptable levels during hours of operation. Items of work that are excessively noisy must be done after hours. What is considered excessive noise?*

Answer 07: STA is defining excessive noise as any consistent noise in excess of 85 decibels more than 8 times per daytime hour at a distance of 20 feet from the source. Work resulting in consistent noise greater than 85 decibels is to be restricted to hours in which the facility is closed to the public. Plaza Hours of Operations area as follows:
Monday – Friday 5am – 11:20pm
Saturday 6am – 9:50pm
Sunday 8am – 8:07pm
The contractor may elect to implement different measures to minimize or reduce sources of noise in order to avoid limited working hours and maintain project schedule. Means and methods for minimizing or reducing noise is the responsibility of the contractor.
(reference also General Conditions for STA Construction part 5.07, Section 015000 3.4(G) and 3.4(G)(3), Section 017300(3.4)(E), and Section 0241196 (1.6)(B))

Question 08: *Is there roof top work?*

Answer 08: Yes, there is roof top work related to mechanical changes. Please refer to the project plans and project manual for the scope of work in this area.

Question 09: *Can you tell me about the security integration for the project?*

Answer 09: Secure access & security camera final placement/configuration is to be completed by a company that is Lenel, Milestone, Axis, and Dell certified. An existing state contract with ASG is available for our use and meets the specification of the project. It is expected that ASG will be contracted with to perform this work.

Question 10: *Can you provide information on commissioning for the project?*

Answer 10: STA's on-call A&E consultants will be performing the commissioning as part of their contract.

Question 11: *Is there a Notice to Proceed date?*

Answer 11: Notice to Proceed will follow the November Board Meeting where it will have to receive approval. 2-3 weeks following that should be NTP.

Question 12: *Will contractors be issued badges and garage passes?*

Answer 12: Yes, per the General Conditions.

Question 13: *Are there any Alternates?*

Answer 13: Yes, there will be bid options in an Addendum #2 for sprinkler head work.

Last day for bidder questions: September 1, 2015

Attachments:

Pre-Bid Meeting Agenda, dated August 11, 2015
Bidders Lists (pre-bid attendees)
Clarification sketches S-01 through S-12, A01 through A-13, and E-01 through E-10
Specification Revisions
Substitution Requests

END OF ADDENDUM #1

SPOKANE TRANSIT

PRE-BID MEETING
FOR THE
Plaza Upgrade
15-STA-512

AGENDA

Date: August 12, 2015

Time: 10:00 a.m. - 11:00 a.m.

Meeting Location: 701 W. Riverside Ave., Spokane, WA 99201

1. SIGN IN

2. INTRODUCTIONS

3. GUIDELINES

   a. Questions and comments will be accepted during the meeting.

   b. Remarks, clarifications, or corrections to the IFB during the meeting shall not change the terms of the solicitation.

   c. A **written amendment** will be issued following the meeting stating any clarifications, corrections, or additions to the solicitation. The sign in sheet will be included along with an updated Plan Holders list with all information provided. All prospective Bidders and Plan Centers who received the original IFB will receive the amendment.

   d. **All communications** shall be directed to Jessica Charlton as listed in the bid document. You may contact Jessica Charlton at jcharlton@spokanetransit.com or by telephone at 509-325-6049. **Please do not contact the architects, engineers, or Plaza staff directly. The goal is to get consistent information to all prospective Bidders.**

   e. Reminder of State Prevailing Wage, Rule 171, apprenticeship requirement, bonding & insurance requirements, permitting, noise & dust limitations, security, traffic control/access, project safety, project safety, & project safety.

4. TOUR OF WORK GENERAL WORK AREAS:

   a. Please direct any questions during the tour to Jessica Charlton, Project Manager.

Plaza Building Hours:
M-F 5am – 11:20pm
Sat. 6am – 9:50pm
Sun. 8am – 8:07pm

Pre-Bid Meeting – Plaza Upgrade 15-STA-512
August 12, 2015

Spokane Transit
328-RIDE • TTY 456-4327
www.spokanetransit.com

SIGN-IN

PLEASE PRINT. ALL INFORMATION IS OPTIONAL.

	NAME	COMPANY	PHONE & EMAIL
1	DARIN MEEKS	DARDAN ENTERPRISES	208 773-5418 darin@dardaninc.com
2	MAYNARD DAVIS	WESTERN STATE CONST	509-892-0600 WSC@AIR-PIPE.COM
3	Andy Stamschror	Lydig	spokane.estimating@lydig.com
4	Brad Corigliano	Lydig	bcorigliano@lydig.com
5	DAVE Griggs	AIE	509 467-7733
6	Brande Kilgore	Kilgore Construction, Inc.	509 238-0703 brande@kcispokane.com
7	Terrance Davis Scott Roundtree	TW Clark Const. LLC	509-927-0800 scott@twclark.com
8	BRIAN Keller	Power City Electric	535-8500 ext. 1016 bkeller@powercityelectric.com
9	TOM MORROW	GARCO CONST	509-535-4688 TOM@GARCO.COM
10	FRANK ROBINSON	MERIDIAN	509 443 0252 frank@meridianco.com

Pre-Bid Meeting – Plaza Upgrade 15-STA-512
August 12, 2015

Spokane Transit
328-RIDE • TTY 456-4327
www.spokanetransit.com

SIGN-IN

PLEASE PRINT. ALL INFORMATION IS OPTIONAL.

	NAME	COMPANY	PHONE & EMAIL
11	MARK WILLIAMS	IRS ENVIRONMENTAL	509 927 7867 MARKW@IRSENVIRO.COM
12	Siri Ashworth	Coffman Engineers	328-2994 ashworth@coffman.com
13	JEFF KARNER	ALSC ARCHITECTS	838-8568 jwarner@alscarchitects.com
14	Robert Swan	FOGG ELECTRIC	509 928 2420 Robert@FoggElectric.com
15			
16			
17			
18			
19			
20			

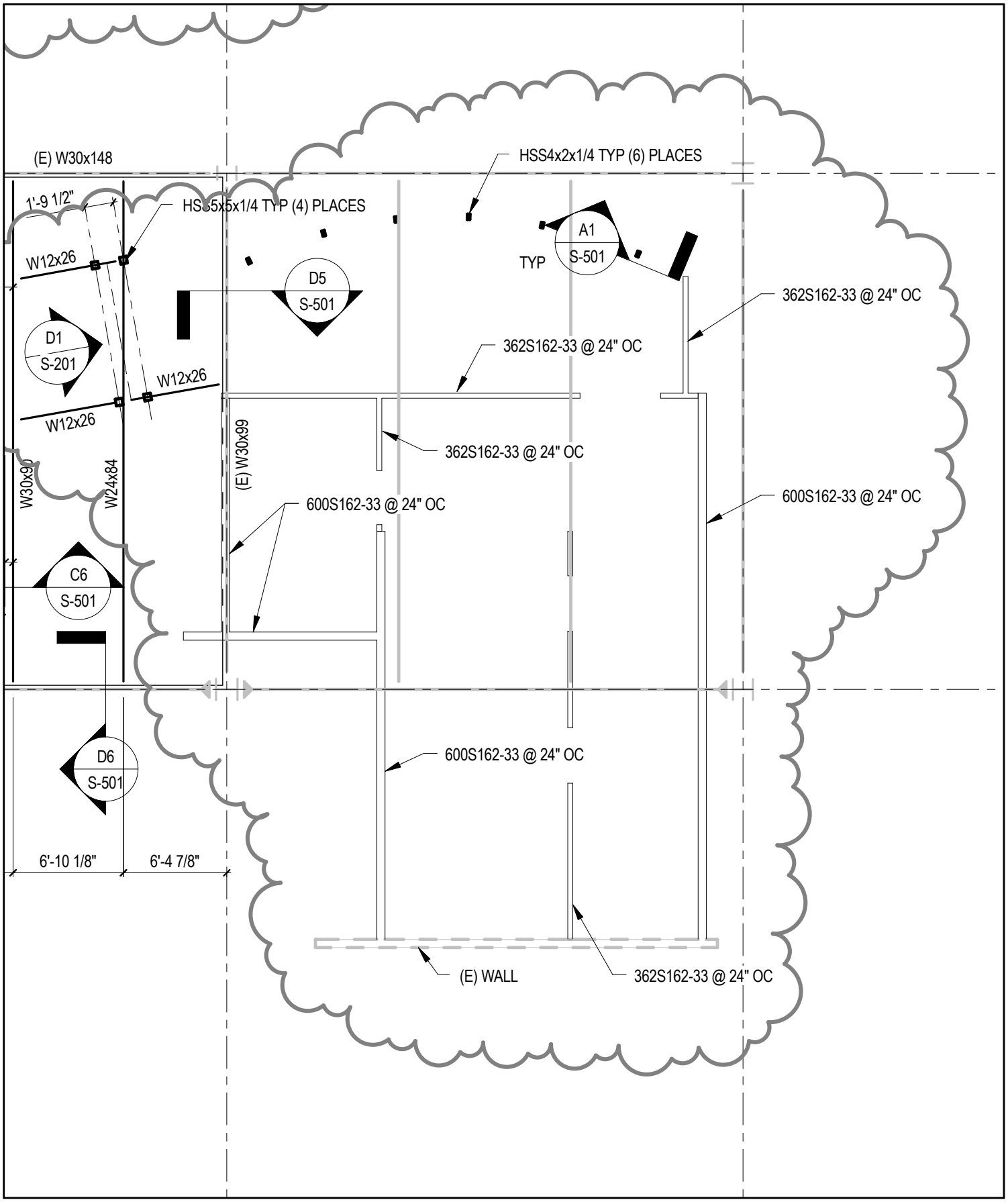

Spokane Transit

COFFMAN ENGINEERS
10 N. Post Street, Suite 500 | Spokane, WA 9920
ph 509.328.2994 | fax 509.328.2999
coffman.com
LASTING

ALSC ARCHITECTS

ADDENDUM # 1

DATE	DRAWN	DWG. NO.	JOB NO.	REF. SHT.
08/13/2015	KVP	S-01	15-STA-512	S-111

PROJECT STA PLAZA UPGRADE
15-STA-512

DESCRIPTION
ADDED FRAMING AT CUSTOMER SERVICE AREA

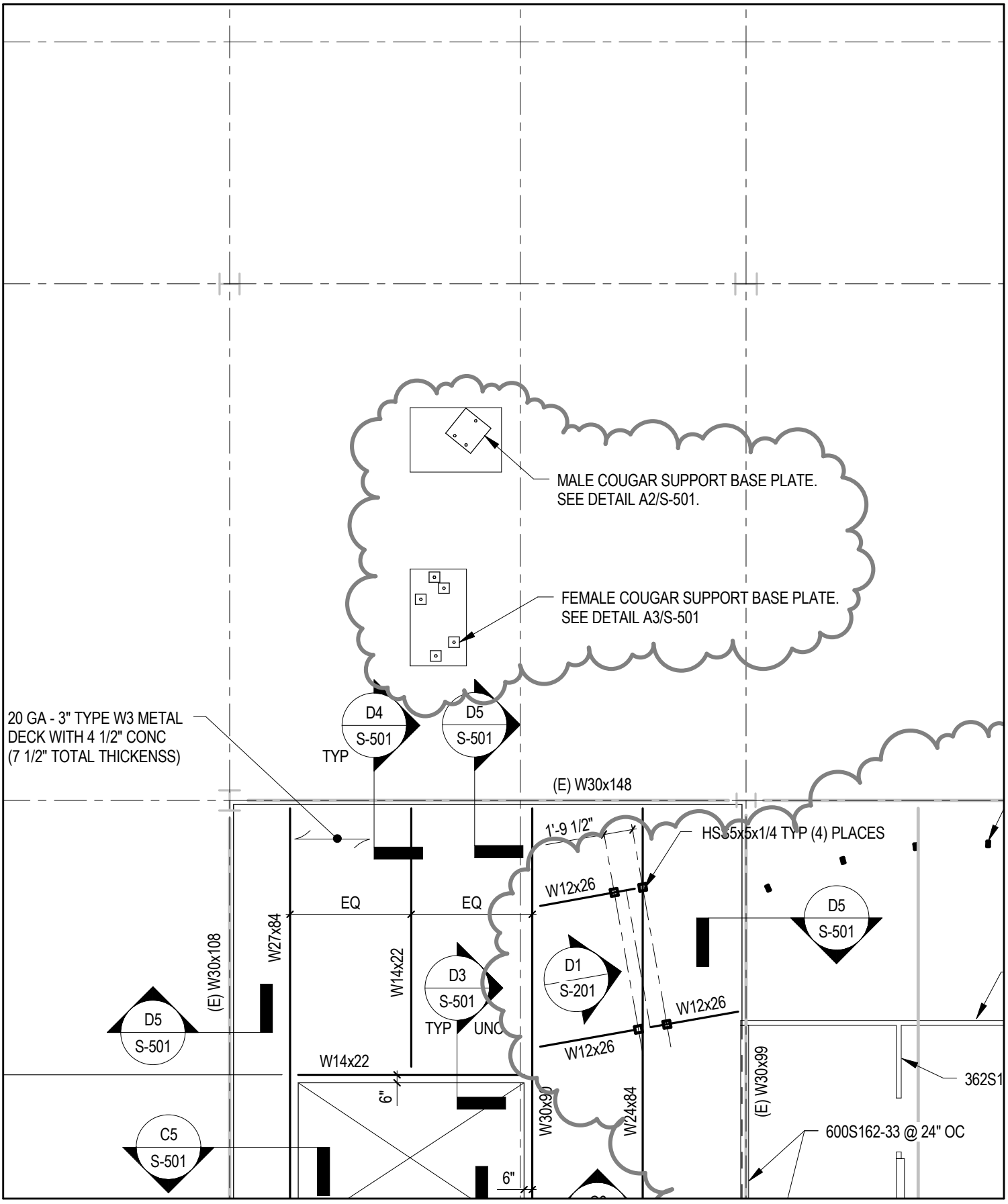

Spokane Transit

COFFMAN ENGINEERS
10 N. Post Street, Suite 500 | Spokane, WA 9920
ph 509.328.2994 | fax 509.328.2999
coffman.com
LASTING

ALSC ARCHITECTS

ADDENDUM # 1

DATE	DRAWN	DWG. NO.	JOB NO.	REF. SHT.
08/13/2015	KVP	S-02	15-STA-512	S-111

PROJECT STA PLAZA UPGRADE
15-STA-512

DESCRIPTION
ADDED STATUE SUPPORT FRAMING

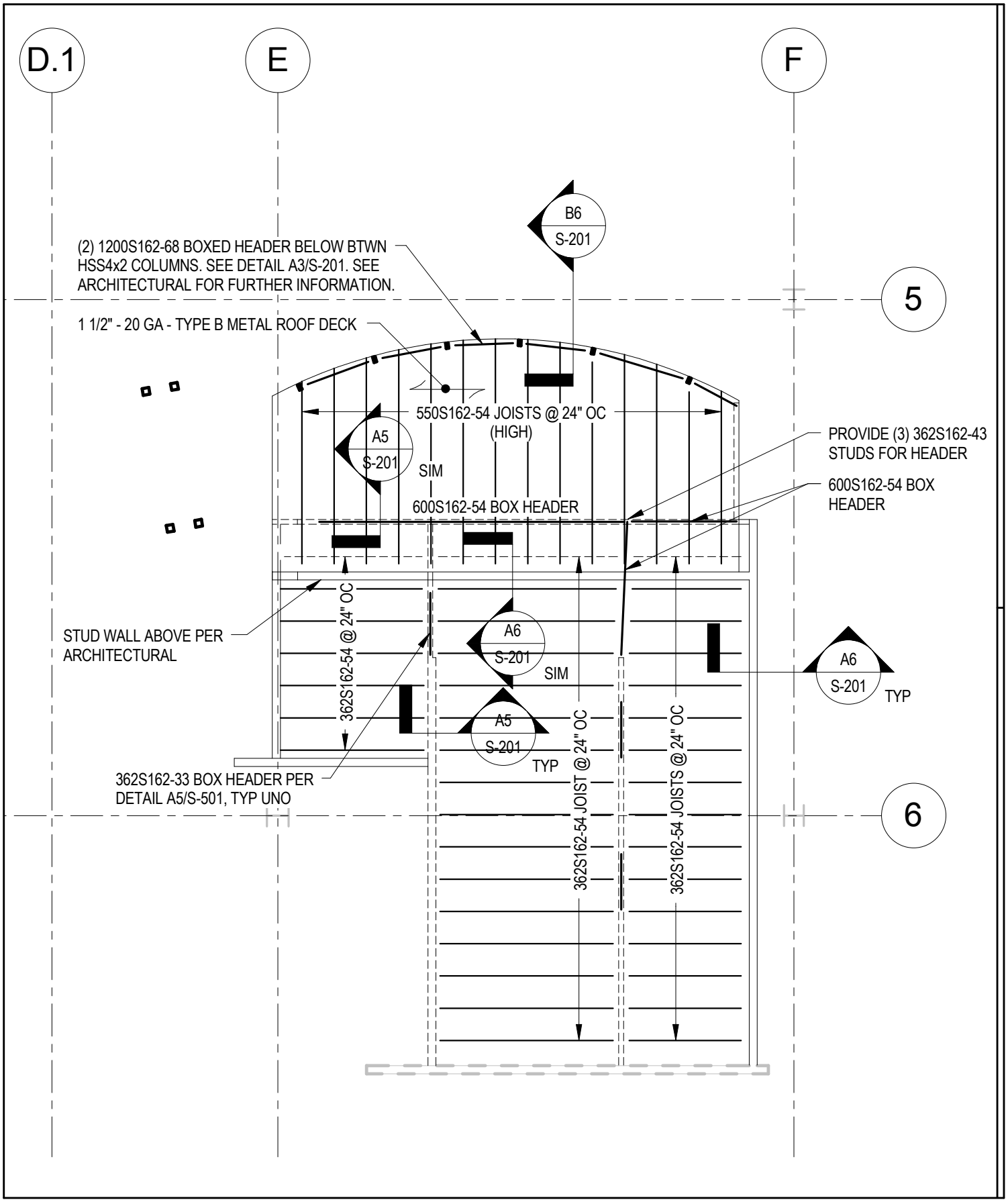

Spokane Transit

COFFMAN ENGINEERS
10 N. Post Street, Suite 500 | Spokane, WA 9920
ph 509.328.2994 | fax 509.328.2999
coffman.com
LASTING

ALSC ARCHITECTS

ADDENDUM # 1

DATE	DRAWN	DWG. NO.	JOB NO.	REF. SHT.
08/13/2015	KVP	S-03	15-STA-512	S-121

PROJECT STA PLAZA UPGRADE
15-STA-512

DESCRIPTION
CUSTOMER SERVICE ROOF FRAMING PLAN

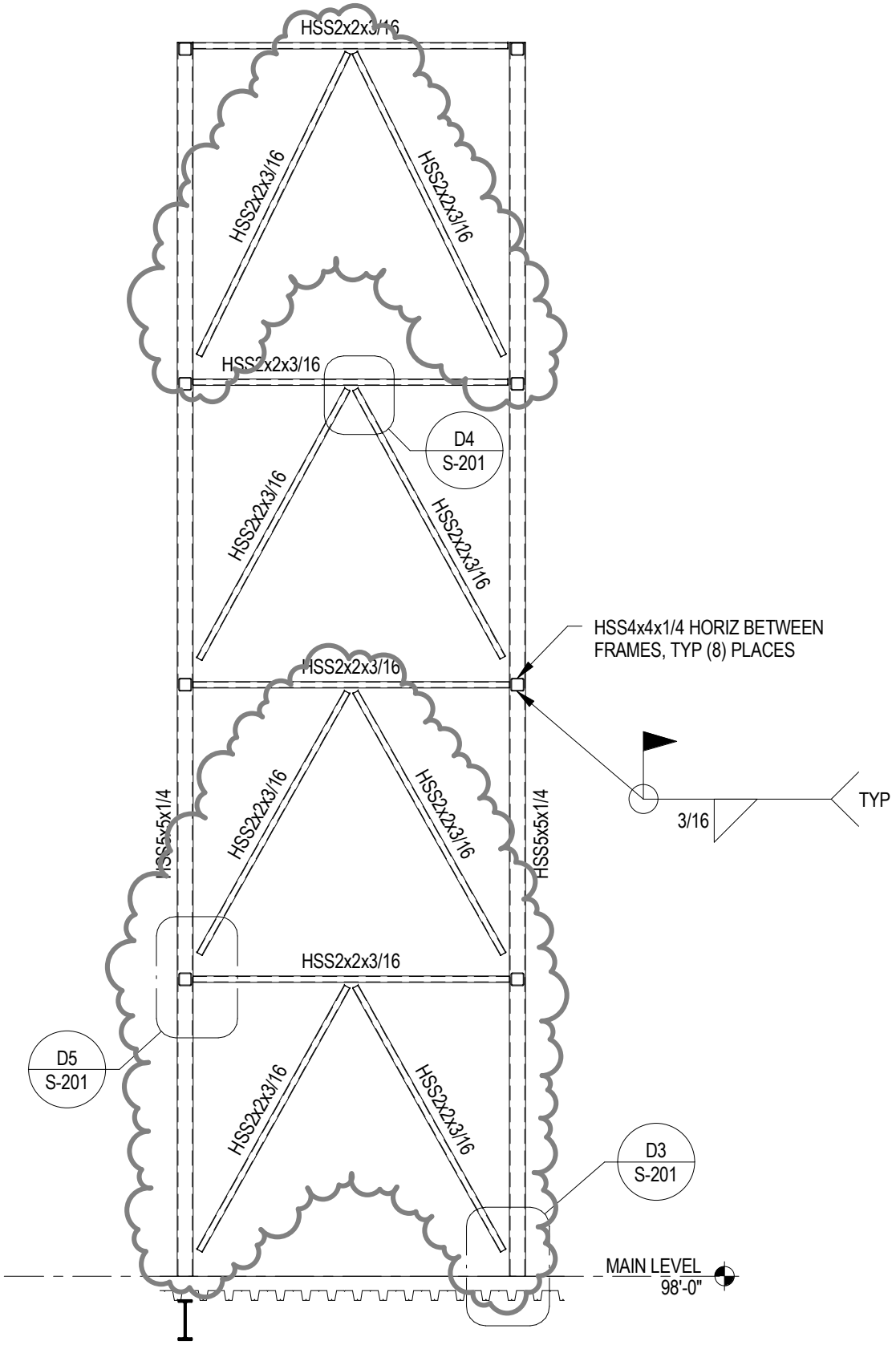

Spokane Transit

COFFMAN ENGINEERS
10 N. Post Street, Suite 500 | Spokane, WA 9920
ph 509.328.2994 | fax 509.328.2999
coffman.com
LASTING

ALSC ARCHITECTS

ADDENDUM # 1

DATE	DRAWN	DWG. NO.	JOB NO.	REF. SHT.
08/13/2015	KVP	S-04	15-STA-512	S-201

PROJECT STA PLAZA UPGRADE
15-STA-512

DESCRIPTION
REVISED BRACE FRAMING

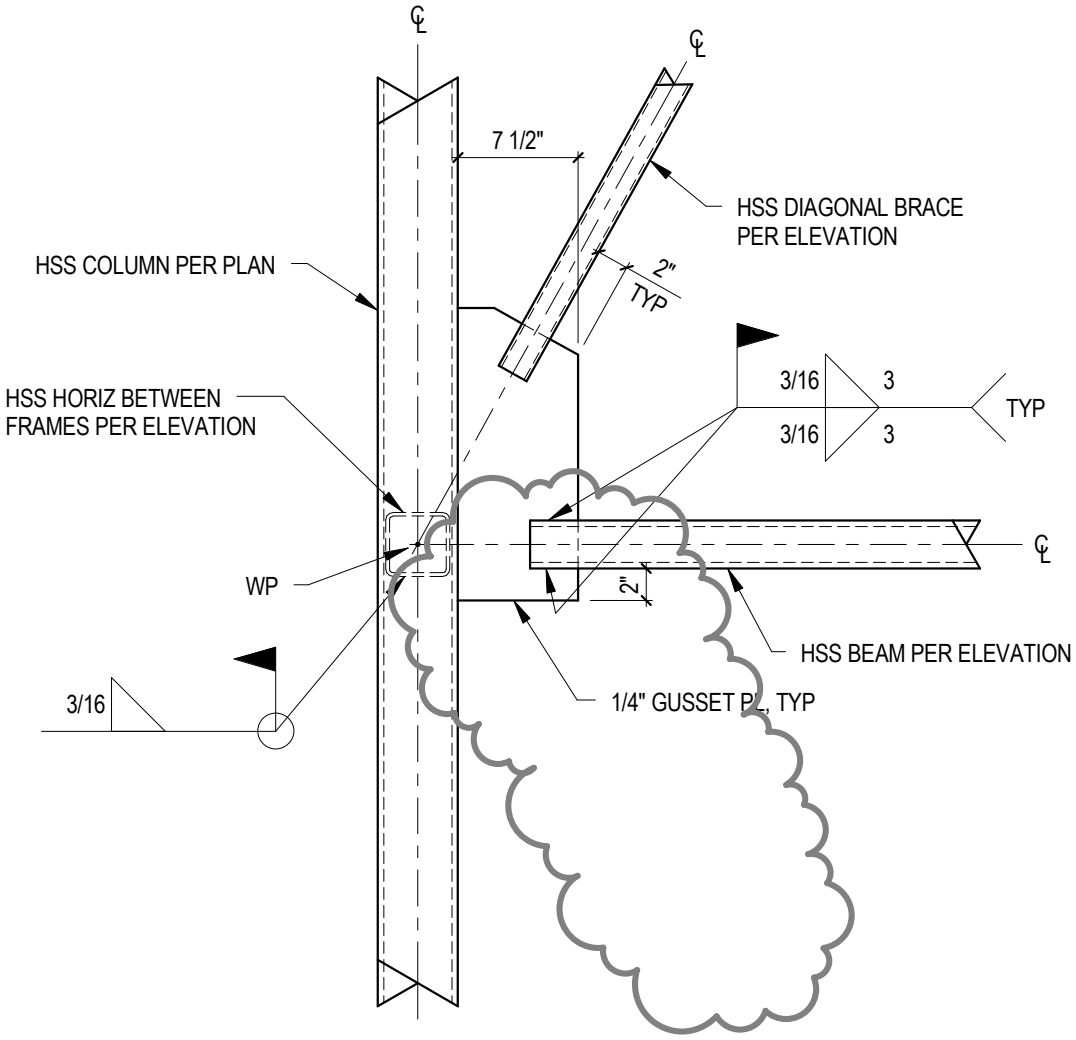

D5 DIAGONAL BRACE CONNECTION AT BEAM/COLUMN

Scale: 1" = 1'-0"

Spokane Transit

COFFMAN ENGINEERS
10 N. Post Street, Suite 500 | Spokane, WA 99201
ph 509.328.2994 | fax 509.328.2999
coffman.com
LASTING

ALSC ARCHITECTS

ADDENDUM # 1

DATE	DRAWN	DWG. NO.	JOB NO.	REF. SHT.
08/13/2015	KVP	S-05	15-STA-512	S-201

PROJECT STA PLAZA UPGRADE
15-STA-512

DESCRIPTION
REVISED BRACE FRAMING

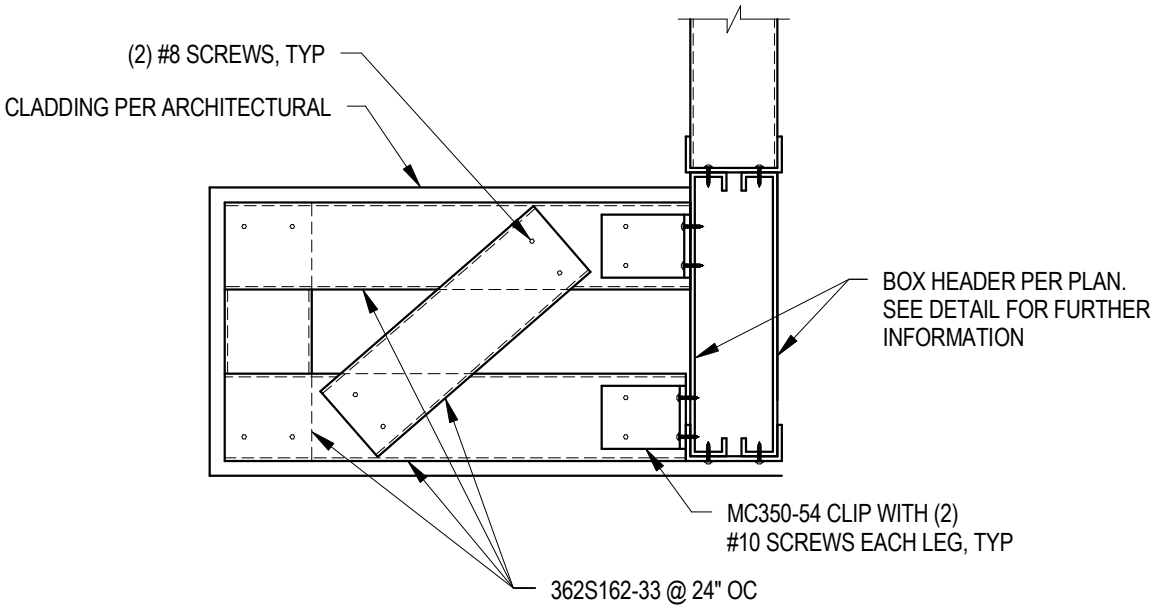

D6

CUSTOMER SERVICE CANOPY

Scale: 1 1/2" = 1'-0"

Spokane Transit

COFFMAN ENGINEERS
10 N. Post Street, Suite 500 | Spokane, WA 9920
ph 509.328.2994 | fax 509.328.2999
coffman.com
LASTING

ALSC ARCHITECTS

PROJECT STA PLAZA UPGRADE
15-STA-512

ADDENDUM # 1

DATE	DRAWN	DWG. NO.	JOB NO.	REF. SHT.
08/13/2015	KVP	S-06	15-STA-512	S-201

DESCRIPTION
NEW DETAIL

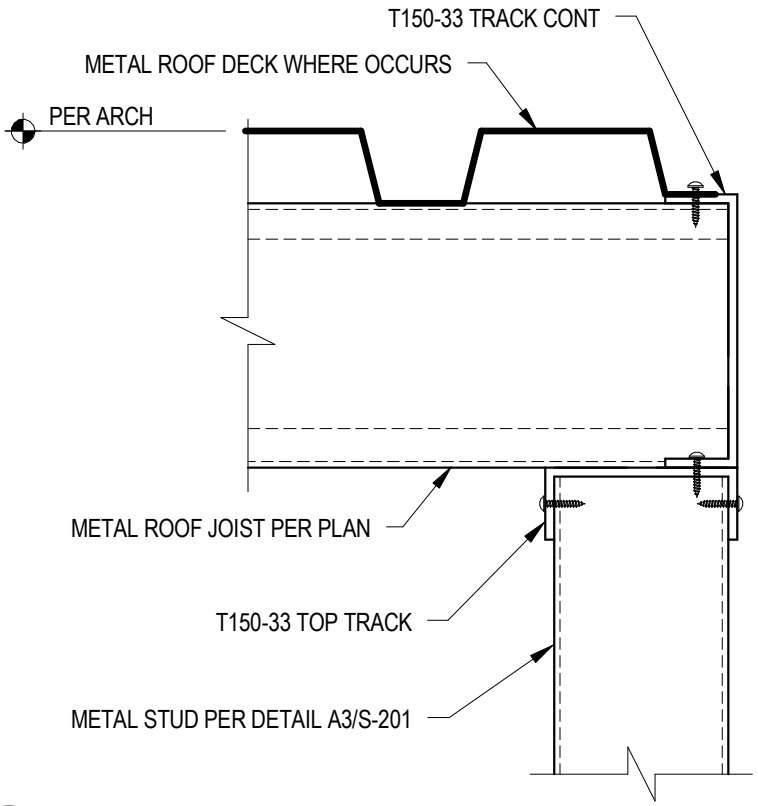

B6

TYPICAL ROOF JOIST CONN

Scale: 3" = 1'-0"

Spokane Transit

COFFMAN ENGINEERS
10 N. Post Street, Suite 500 | Spokane, WA 9920
ph 509.328.2994 | fax 509.328.2999
coffman.com
LASTING

ALSC ARCHITECTS

ADDENDUM # 1

DATE	DRAWN	DWG. NO.	JOB NO.	REF. SHT.
08/13/2015	KVP	S-07	15-STA-512	S-201

PROJECT STA PLAZA UPGRADE
15-STA-512

DESCRIPTION
NEW DETAIL

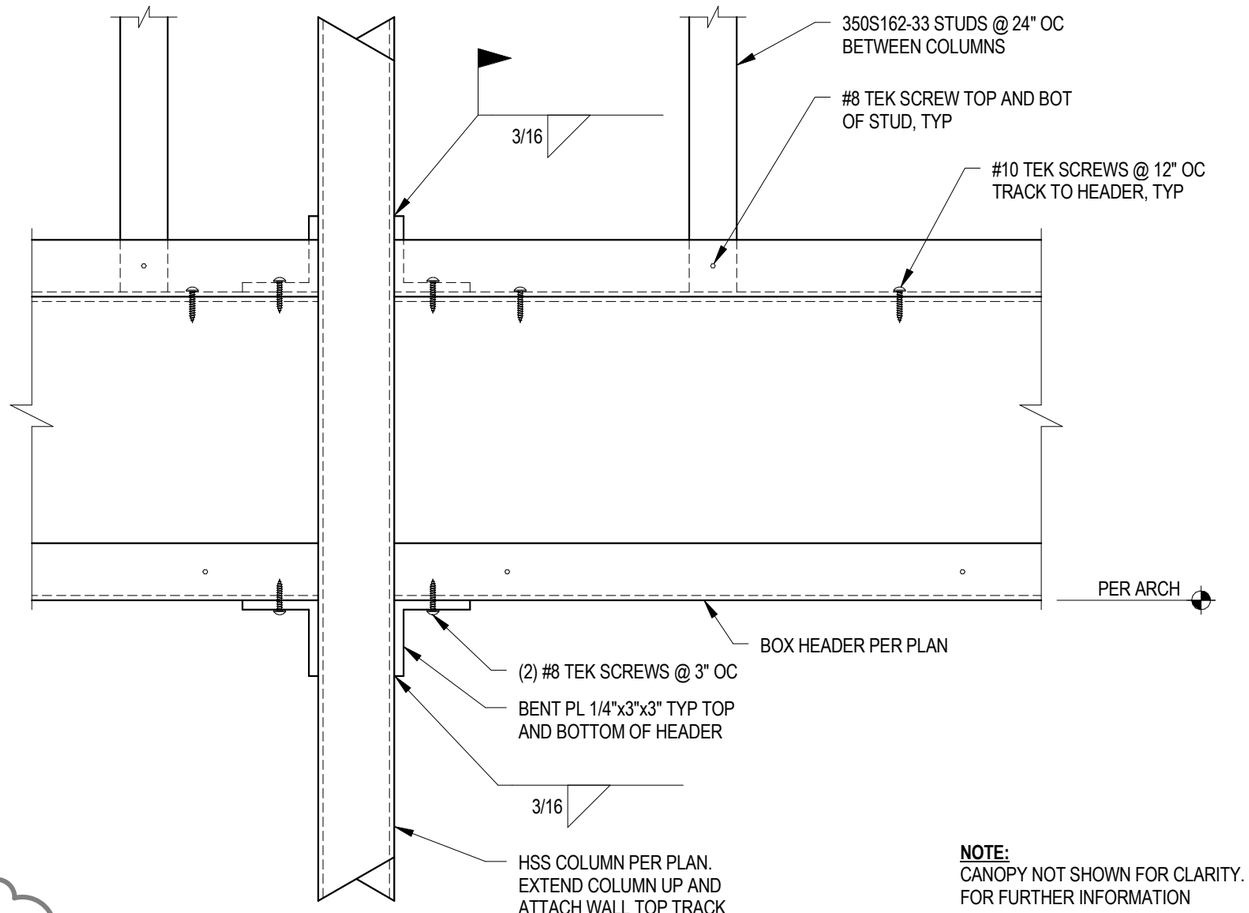

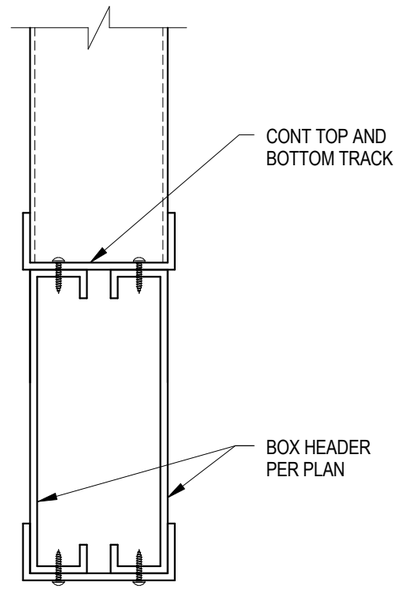

TYP HEADER SECTION

(DO NOT SPLICE HEADER OR TRACKS)

NOTE:
CANOPY NOT SHOWN FOR CLARITY. SEE DETAIL D6/S-201
FOR FURTHER INFORMATION

A3 TYPICAL BOX HEADER

Scale: 3" = 1'-0"

Spokane Transit

COFFMAN ENGINEERS
10 N. Post Street, Suite 500 | Spokane, WA 9920
ph 509.328.2994 | fax 509.328.2999
coffman.com
LASTING

ALSC ARCHITECTS

PROJECT STA PLAZA UPGRADE
15-STA-512

ADDENDUM # 1

DATE	DRAWN	DWG. NO.	JOB NO.	REF. SHT.
08/13/2015	KVP	S-08	15-STA-512	S-201

DESCRIPTION
NEW DETAIL

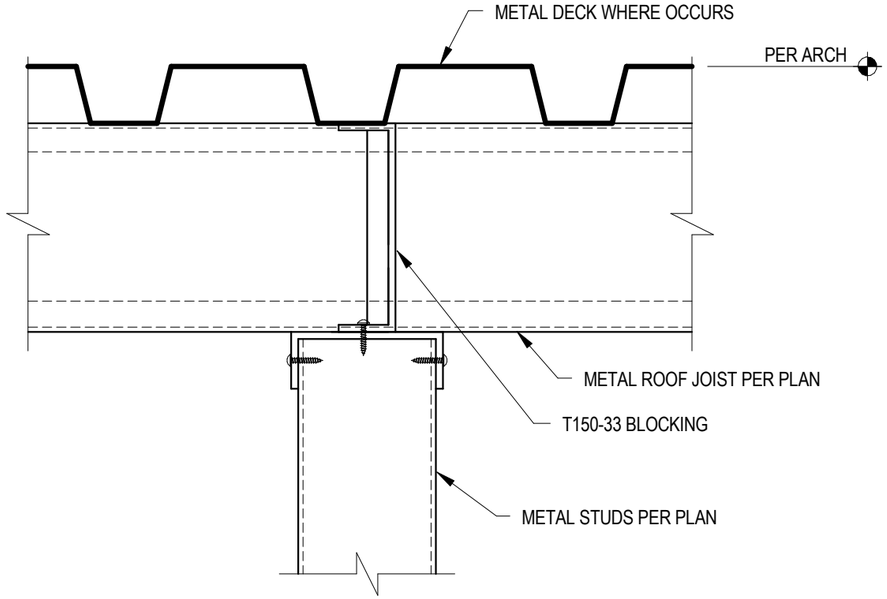

A5 ROOF JOIST BEARING AT STUD WALL
Scale: 3" = 1'-0"

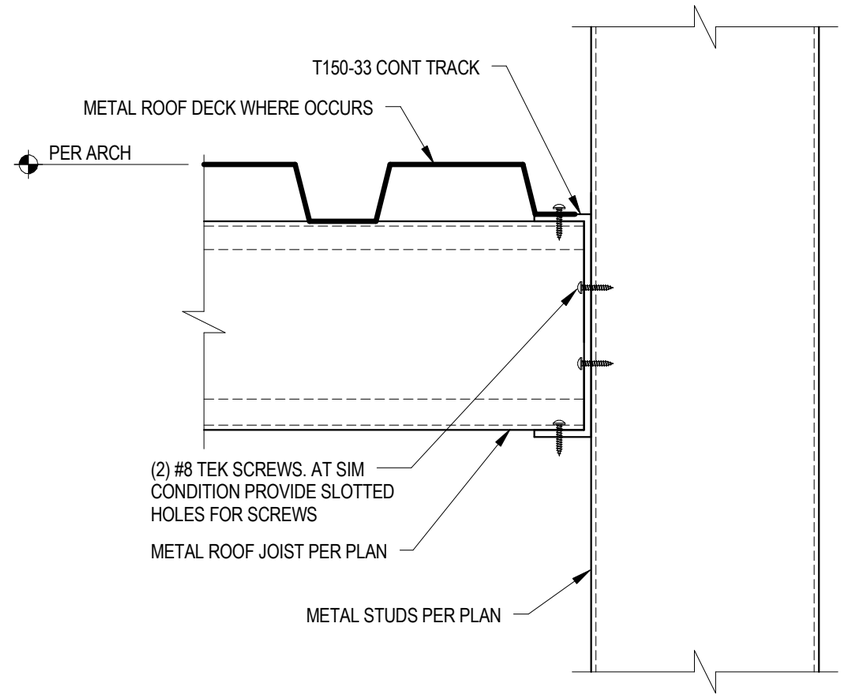

A6 ROOF JOIST CONNECTION AT WALL
Scale: 3" = 1'-0"

Spokane Transit

COFFMAN ENGINEERS
10 N. Post Street, Suite 500 | Spokane, WA 9920
ph 509.328.2994 | fax 509.328.2999
coffman.com
LASTING
ALSC ARCHITECTS

PROJECT STA PLAZA UPGRADE
15-STA-512

ADDENDUM # 1

DATE	DRAWN	DWG. NO.	JOB NO.	REF. SHT.
08/13/2015	KVP	S-09	15-STA-512	S-201

DESCRIPTION
NEW DETAIL

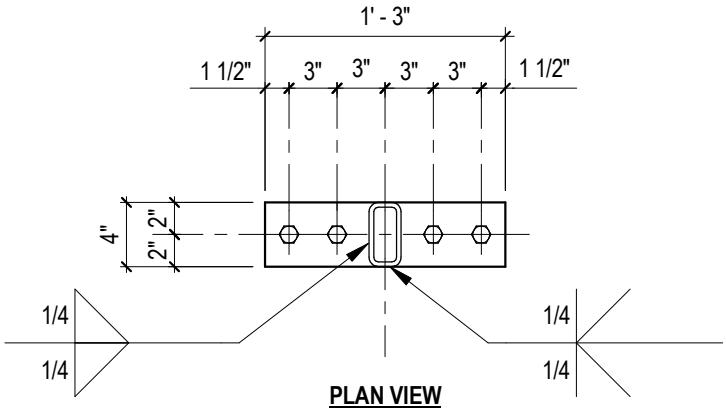

PLAN VIEW

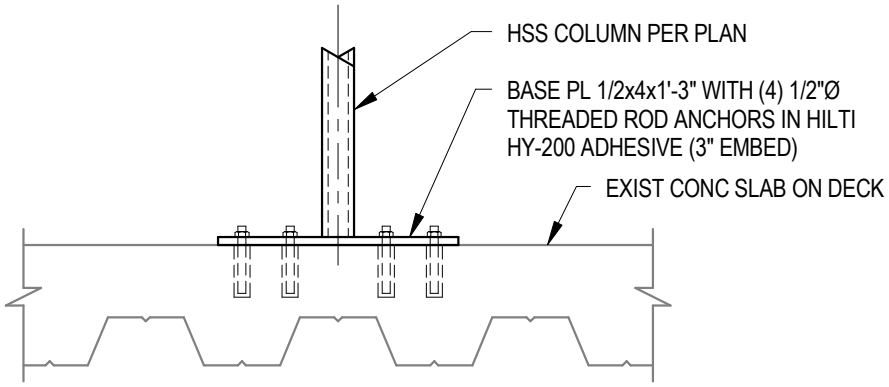

A1 COLUMN BASE

Scale: 1" = 1'-0"

Spokane Transit	COFFMAN ENGINEERS 10 N. Post Street, Suite 500 | Spokane, WA 9920 ph 509.328.2994 | fax 509.328.2999 coffman.com LASTING	ADDENDUM # 1		
	ALSC ARCHITECTS	DATE 08/13/2015	DRAWN KVP	DWG. NO. S-10	JOB NO. 15-STA-512	REF. SHT. S-501
PROJECT STA PLAZA UPGRADE 15-STA-512		DESCRIPTION NEW DETAIL		

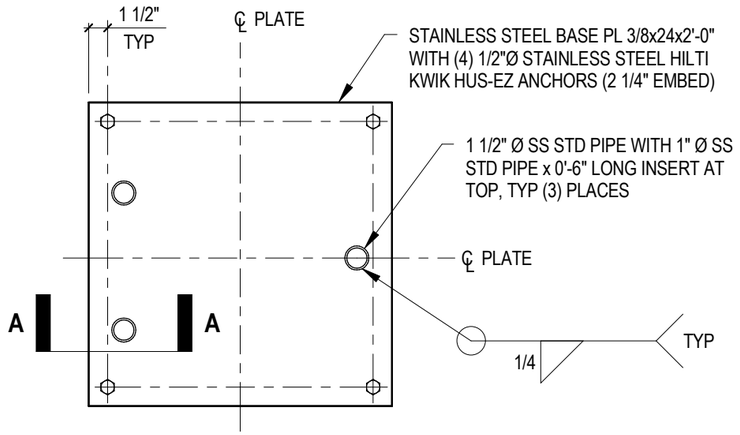

PLAN VIEW

NOTES:
1. CONTRACTOR TO FIELD COORDINATE LOCATION OF PIPES WITH MALE COUGAR STATUE.
2. AT CONTRACTOR'S OPTION, EXISTING MALE COUGAR MOUNT MAY BE MODIFIED AND REUSED

A2 MALE COUGAR STATUE SUPPORT BASE

Scale: 1" = 1'-0"

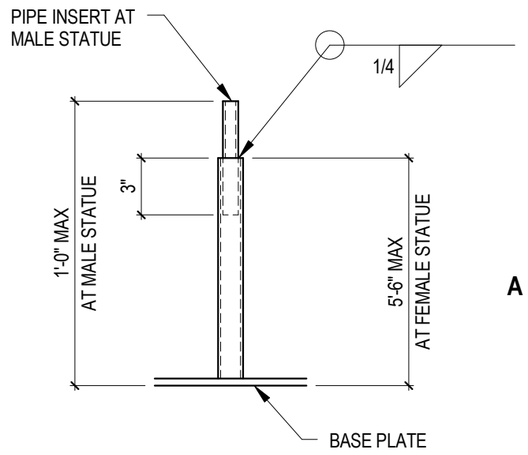

SECTION A-A

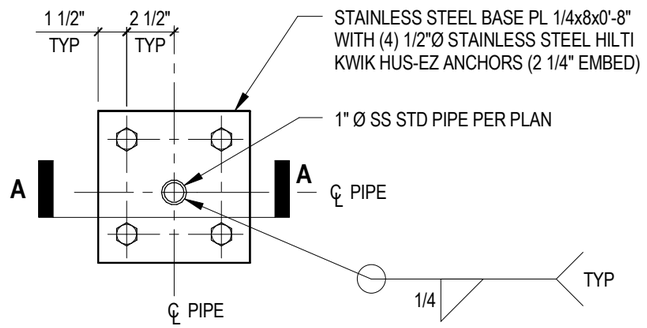

PLAN VIEW

NOTE:
CONTRACTOR TO FIELD COORDINATE LOCATION OF PIPES WITH FEMALE COUGAR STATUE.

A3 FEMALE COUGAR STATUE SUPPORT BASE

Scale: 1 1/2" = 1'-0"

Spokane Transit

COFFMAN ENGINEERS
10 N. Post Street, Suite 500 | Spokane, WA 9920
ph 509.328.2994 | fax 509.328.2999
coffman.com
LASTING

ALSC ARCHITECTS

PROJECT STA PLAZA UPGRADE
15-STA-512

ADDENDUM # 1

DATE	DRAWN	DWG. NO.	JOB NO.	REF. SHT.
08/13/2015	KVP	S-11	15-STA-512	S-501

DESCRIPTION
NEW DETAIL

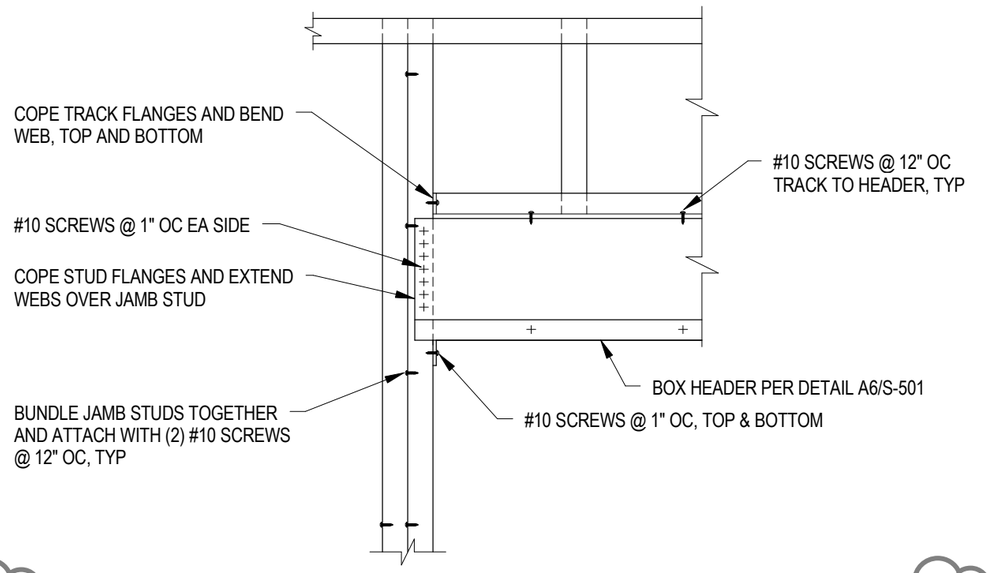

A5 TYP BOX HEADER AT JAMB

Scale: 1" = 1'-0"

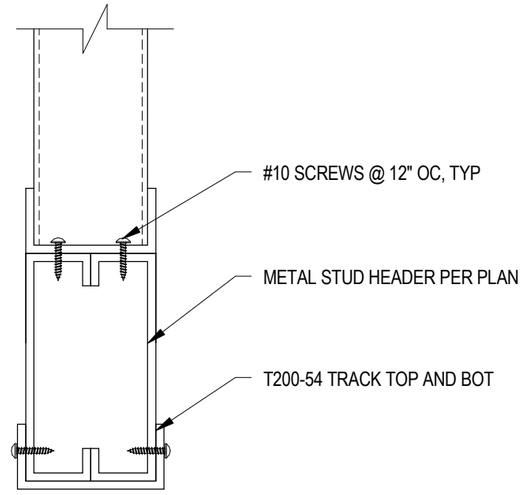

NOTE:
1. DO NOT SPLICE HEADER OR TRACKS.

A6 TYP. BOX HEADER

Scale: 1 1/2" = 1'-0"

Spokane Transit

COFFMAN ENGINEERS
10 N. Post Street, Suite 500 | Spokane, WA 9920
ph 509.238.2994 | fax 509.238.2999
coffman.com
LASTING

ALSC ARCHITECTS

PROJECT STA PLAZA UPGRADE
15-STA-512

ADDENDUM # 1

DATE	DRAWN	DWG. NO.	JOB NO.	REF. SHT.
08/13/2015	KVP	S-12	15-STA-512	S-501

DESCRIPTION
NEW DETAIL

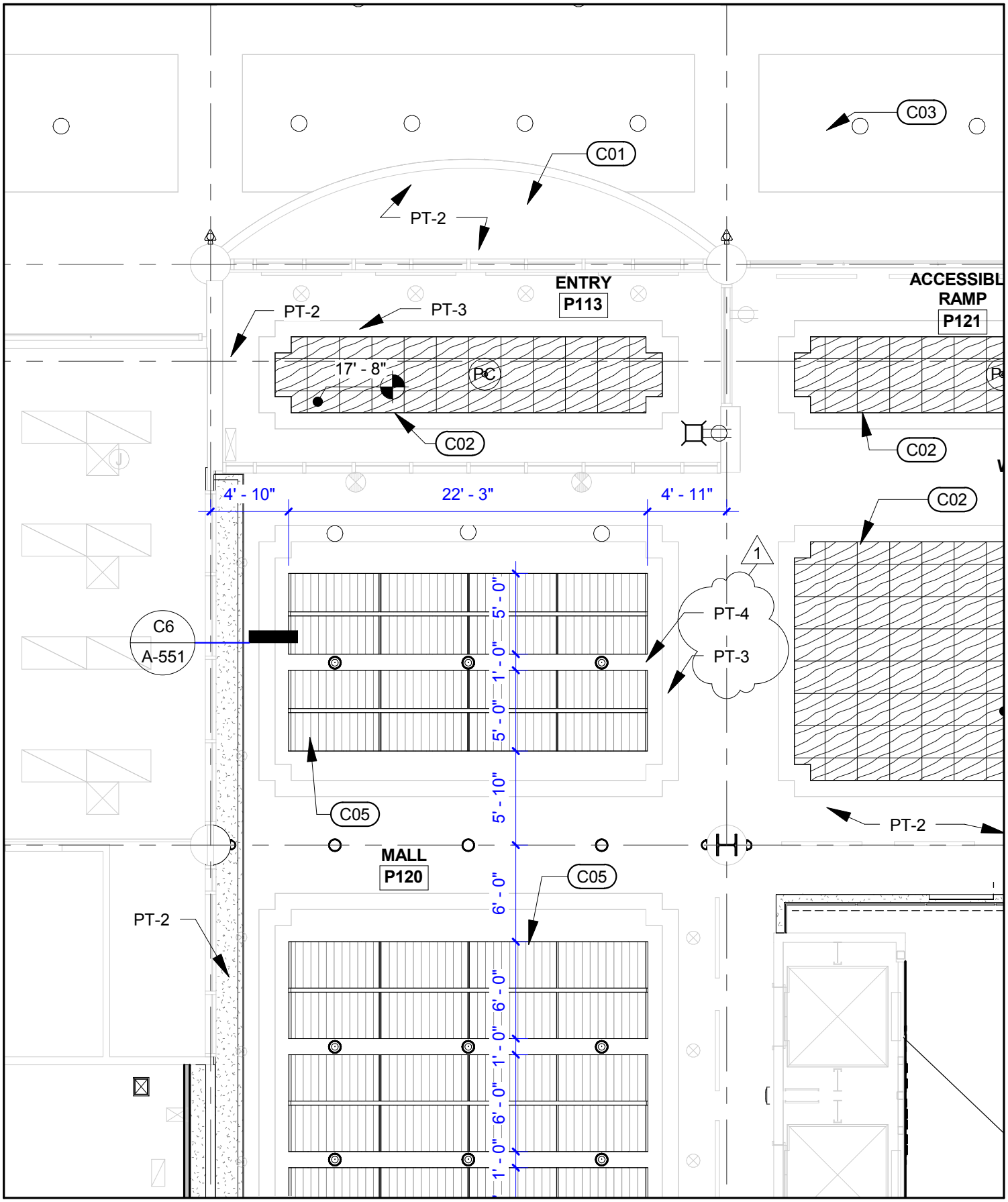

Spokane Transit

COFFMAN ENGINEERS
10 N. Post Street, Suite 500 | Spokane, WA 99201
ph 509.328.2994 | fax 509.328.2999
coffman.com
LASTING

ALSC ARCHITECTS

ADDENDUM # 1

DATE	DRAWN	DWG. NO.	JOB NO.	REF. SHT.
8-12-15	STT	A-01	15-STA-512	A-112

PROJECT STA PLAZA UPGRADE
15-STA-512

DESCRIPTION
UPDATE SOFFIT PAINT DESIGNATIONS

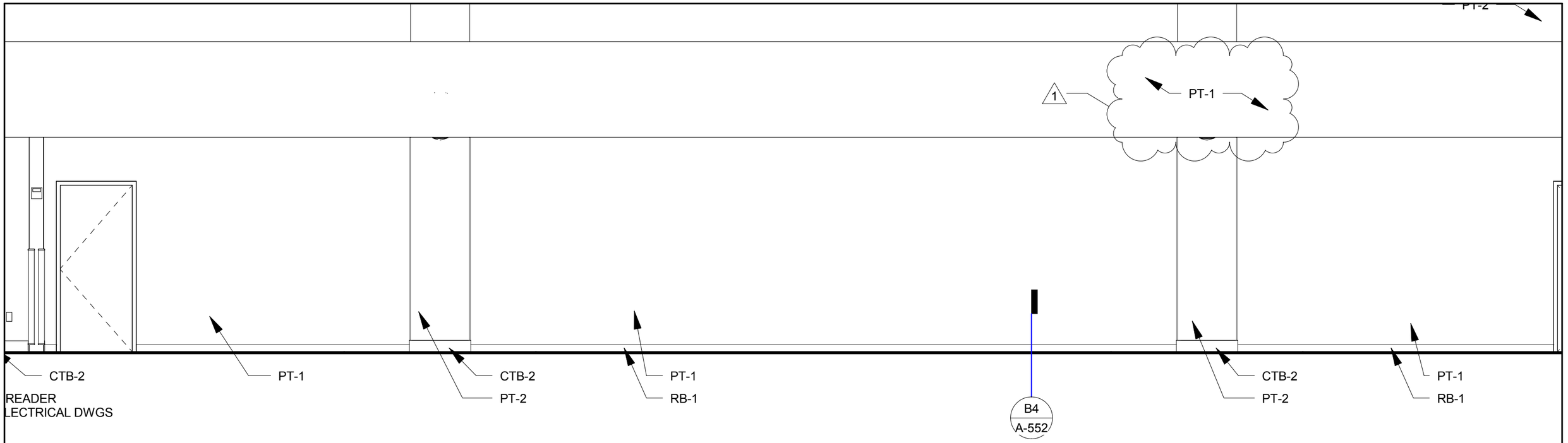

1 MALL P120 - EAST

SCALE : 1/4" = 1'-0"

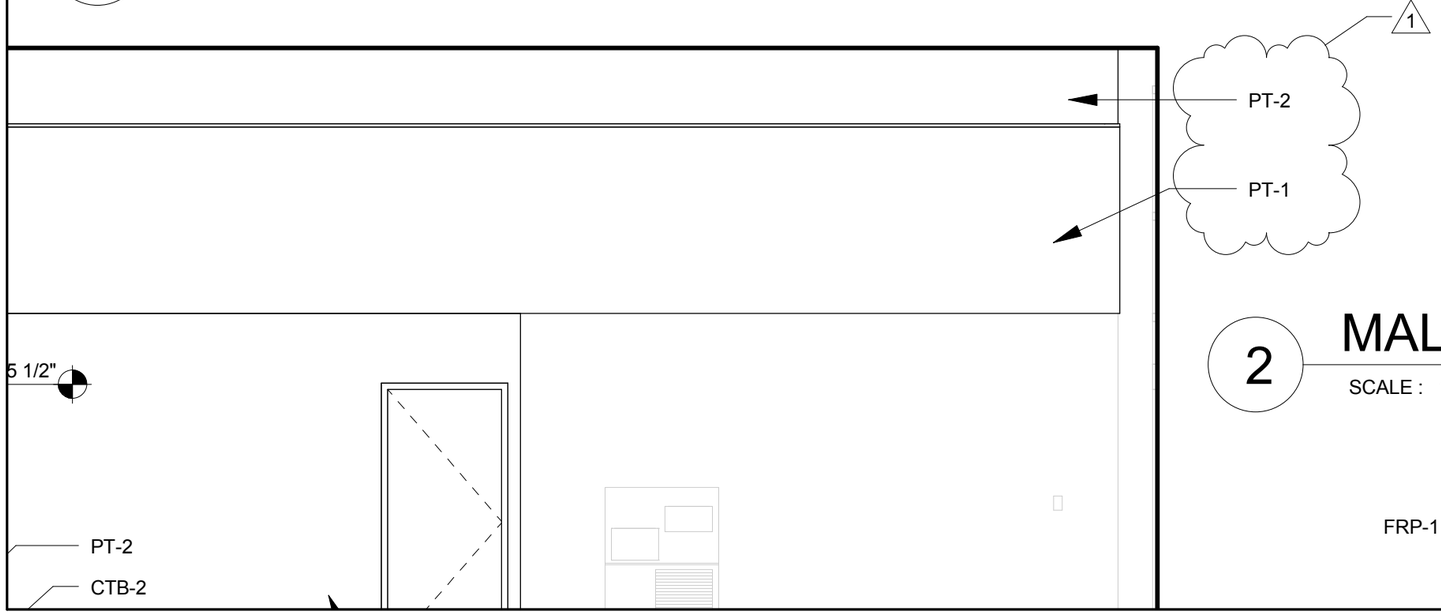

2 MALL P120 - WEST

SCALE : 1/4" = 1'-0"

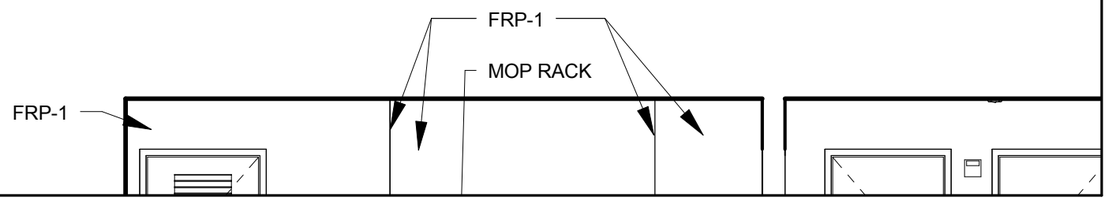

Spokane Transit

COFFMAN ENGINEERS
10 N. Post Street, Suite 500 | Spokane, WA 9920
ph 509.328.2994 | fax 509.328.2999
coffman.com
LASTING

ALSC ARCHITECTS

PROJECT STA PLAZA UPGRADE
15-STA-512

ADDENDUM # 1

DATE	DRAWN	DWG. NO.	JOB NO.	REF. SHT.
8-12-15	STT	A-02	15-STA-512	A-251

DESCRIPTION
UPDATE PAINT DESIGNATIONS 1/A-251, 2/A-251

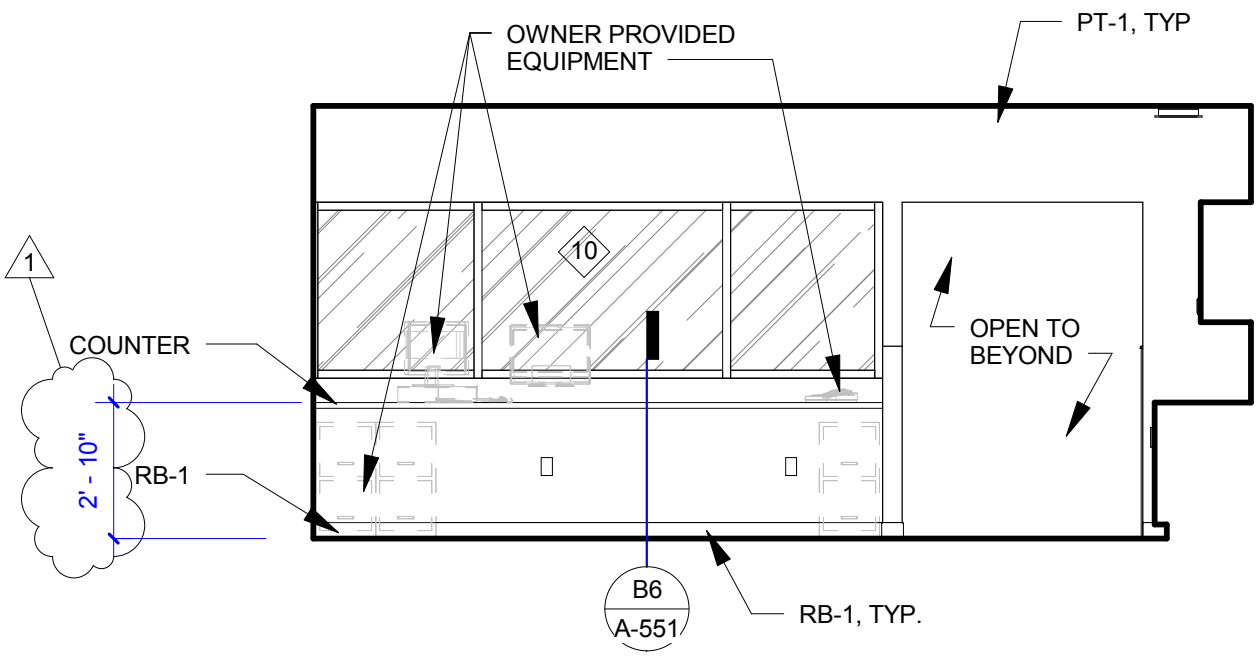

12 LEAD CUST SERV P134 - NORTH

SCALE : 1/4" = 1'-0"

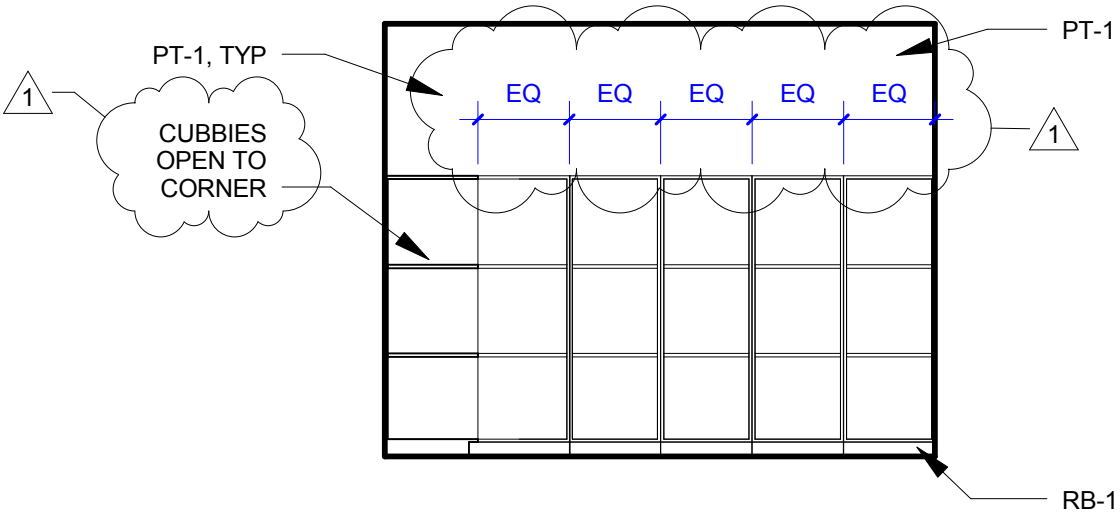

TH

17 LOST AND FOUND P136 - WEST

SCALE : 1/4" = 1'-0"

Spokane Transit

COFFMAN ENGINEERS
10 N. Post Street, Suite 500 | Spokane, WA 99201
ph 509.328.2994 | fax 509.328.2999
coffman.com
LASTING

ALSC ARCHITECTS

ADDENDUM # 1

DATE	DRAWN	DWG. NO.	JOB NO.	REF. SHT.
8-12-15	STT	A-03	15-STA-512	A-253

PROJECT STA PLAZA UPGRADE
15-STA-512

DESCRIPTION
ADD TEXT LEADER. REMOVE CASEWORK SCRIBE

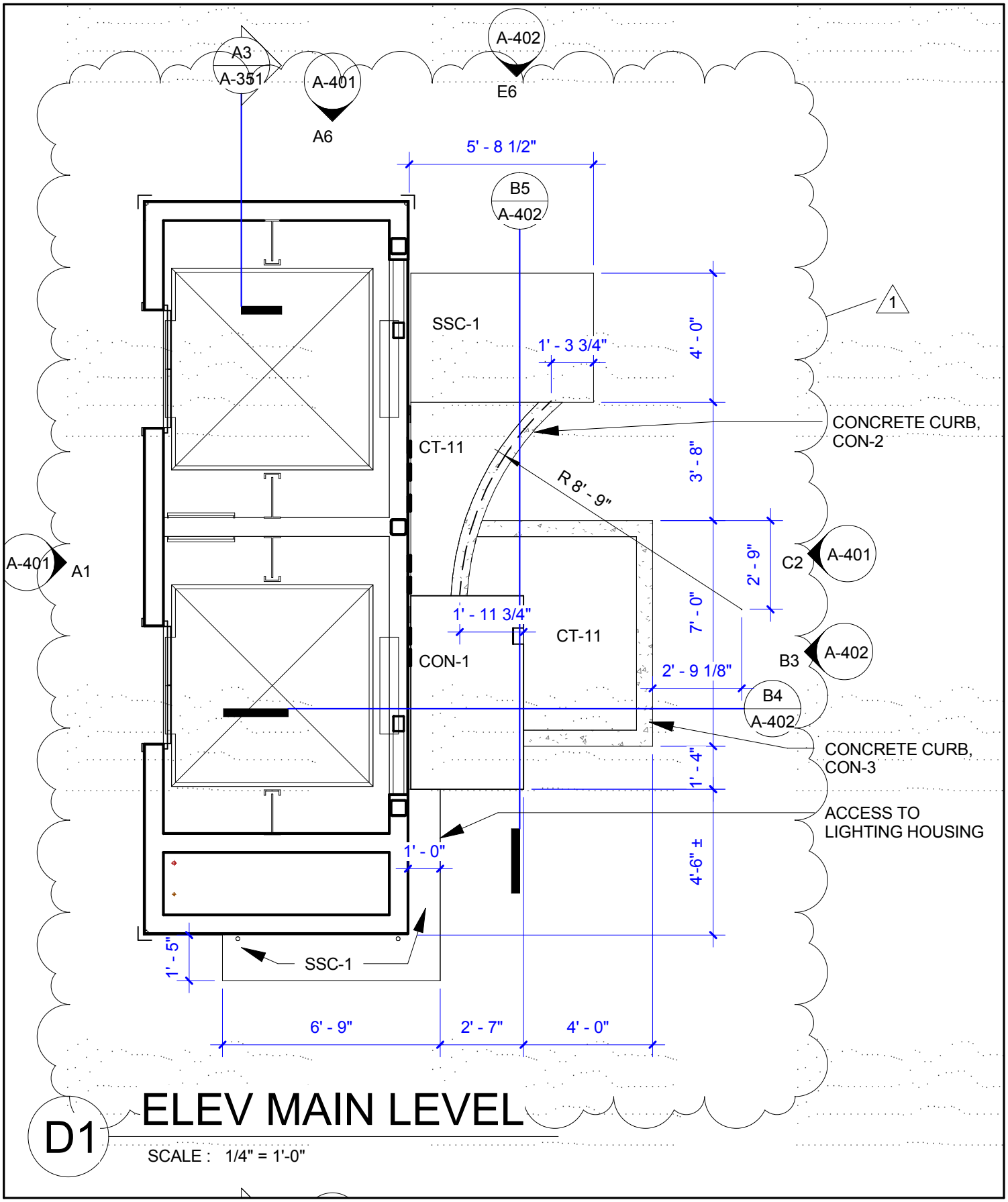

D1 ELEV MAIN LEVEL

SCALE : 1/4" = 1'-0"

Spokane Transit

COFFMAN ENGINEERS
10 N. Post Street, Suite 500 | Spokane, WA 9920
ph 509.328.2994 | fax 509.328.2999
coffman.com
LASTING

ALSC ARCHITECTS

PROJECT STA PLAZA UPGRADE
15-STA-512

ADDENDUM # 1

DATE	DRAWN	DWG. NO.	JOB NO.	REF. SHT.
8-12-15	STT	A-04	15-STA-512	A-401

DESCRIPTION
ADD STAGE LAYOUT DIMENSIONS AND MATERIAL CALLOUT

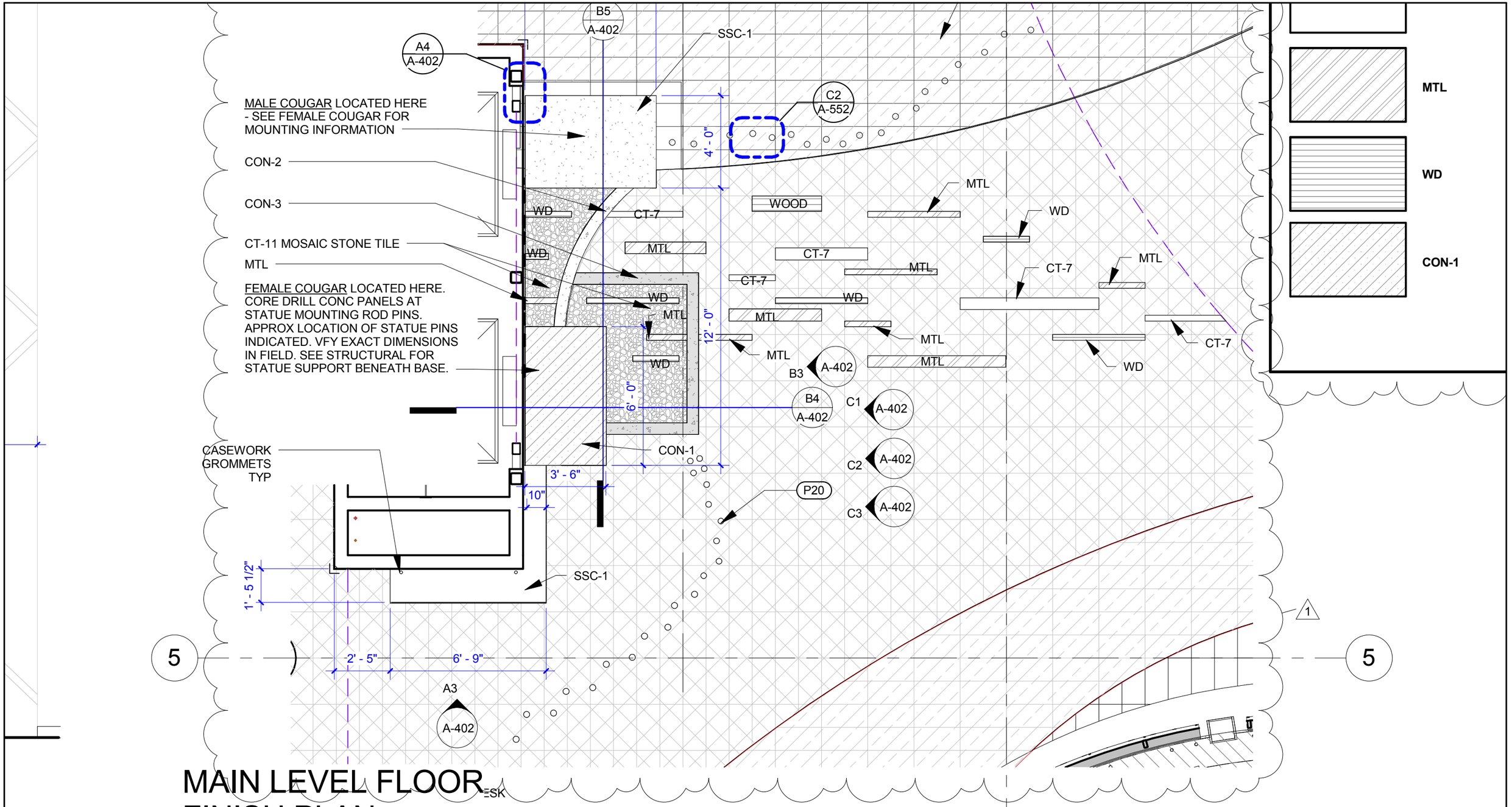

MAIN LEVEL FLOOR FINISH PLAN

C4

SCALE : 1/4" = 1'-0"

Spokane Transit	COFFMAN ENGINEERS	ADDENDUM # 1		
PROJECT STA PLAZA UPGRADE 15-STA-512	ALSC ARCHITECTS	DATE 8-12-15	DRAWN STT	DWG. NO. A-05
		JOB NO. 15-STA-512	REF. SHT. A-402	
		DESCRIPTION ADD FLOOR TILE DESIGNATIONTIONS		

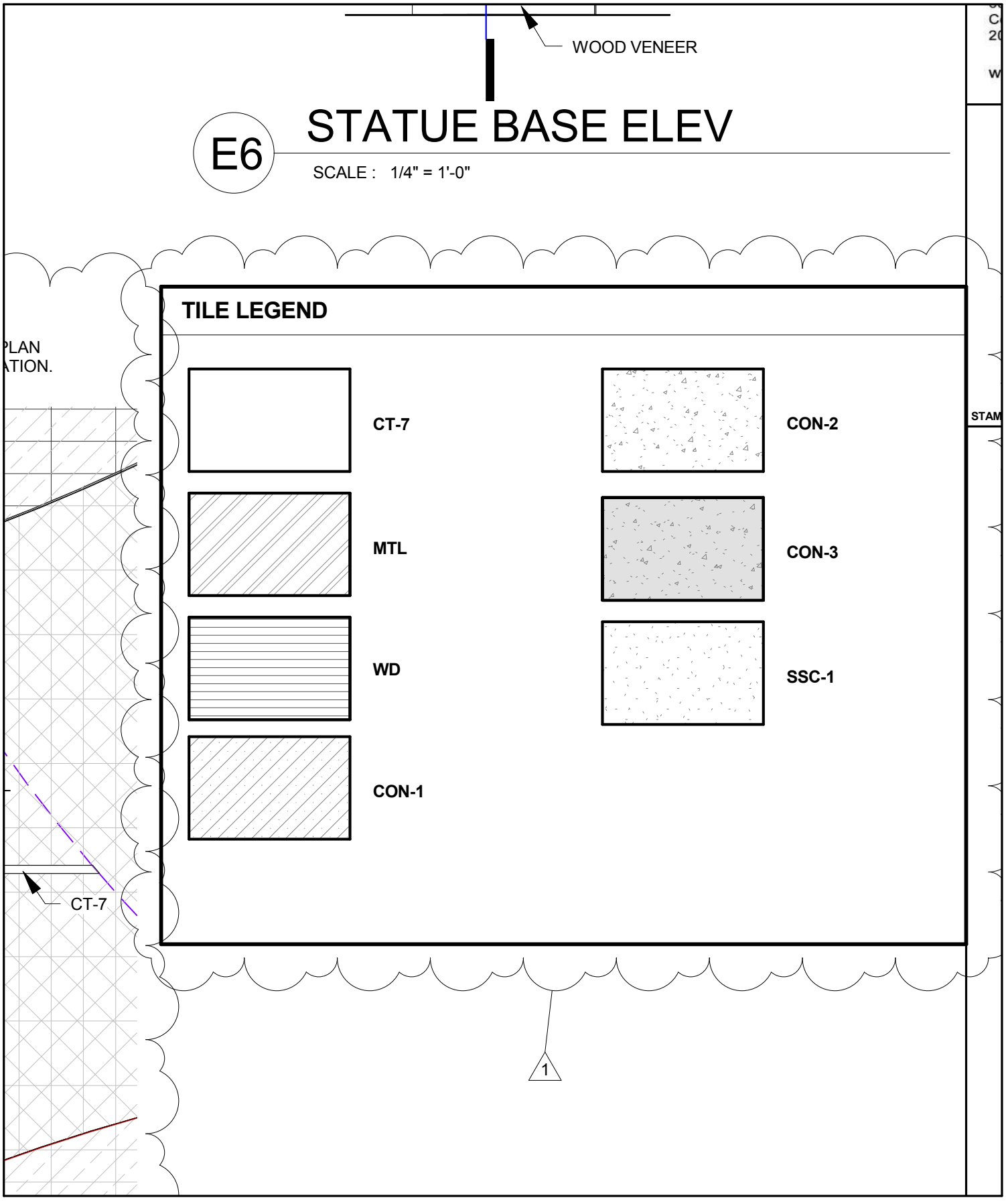

ADDENDUM # 1				
DATE 8-12-15	DRAWN STT	DWG. NO. A-06	JOB NO. 15-STA-512	REF. SHT. A-402

PROJECT STA PLAZA UPGRADE
15-STA-512

DESCRIPTION
ADD FLOOR TILE LEGEND

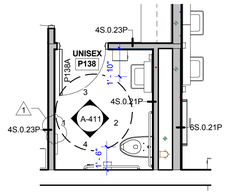

E1 ENLARGED RESTROOM - P137
SCALE : 1/4" = 1'-0"

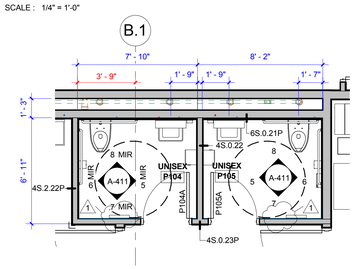

D1 ENLARGED RESTROOM PLAN - P104 & P105
SCALE : 1/4" = 1'-0"

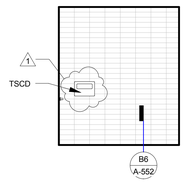

1 UNISEX P137 - WEST
SCALE : 1/4" = 1'-0"

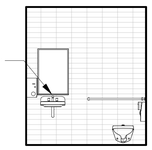

2 UNISEX P137 - EAST
SCALE : 1/4" = 1'-0"

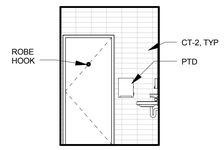

3 UNISEX P137 - NORTH
SCALE : 1/4" = 1'-0"

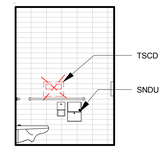

4 UNISEX P137 - SOUTH
SCALE : 1/4" = 1'-0"

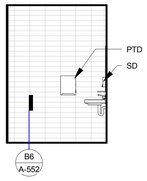

5 UNISEX P105 - WEST
SCALE : 1/4" = 1'-0" P104 SIM, MIRR

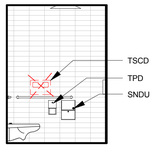

6 UNISEX P105 - EAST
SCALE : 1/4" = 1'-0"

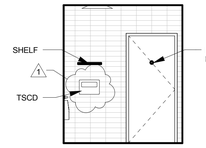

7 UNISEX P105 - SOUTH
SCALE : 1/4" = 1'-0" P104 SIM, MIRR

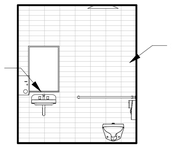

8 UNISEX P105 - NORTH
SCALE : 1/4" = 1'-0" P104 SIM, MIRR

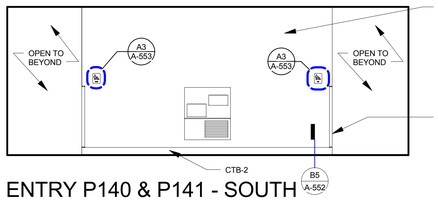

9 ENTRY P140 & P141 - SOUTH
SCALE : 1/4" = 1'-0"

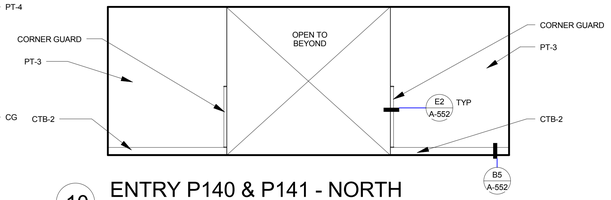

10 ENTRY P140 & P141 - NORTH
SCALE : 1/4" = 1'-0"

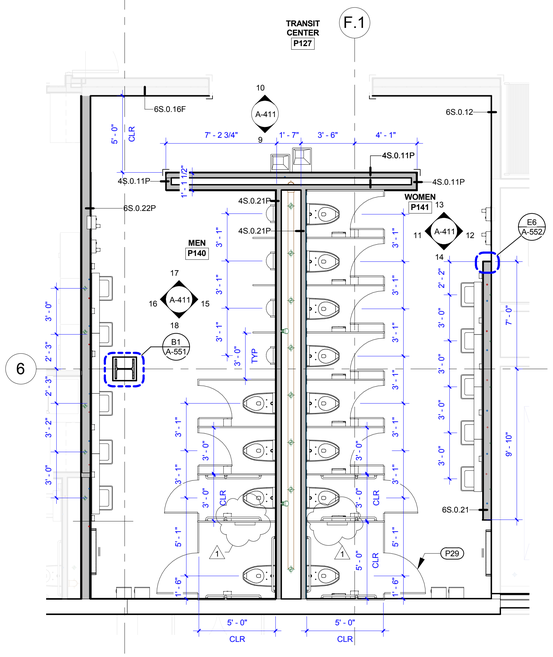

A1 ENLARGED RESTROOM PLAN - P140 & P141
SCALE : 1/4" = 1'-0"

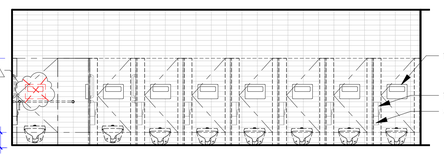

11 WOMEN P141 - WEST
SCALE : 1/4" = 1'-0"

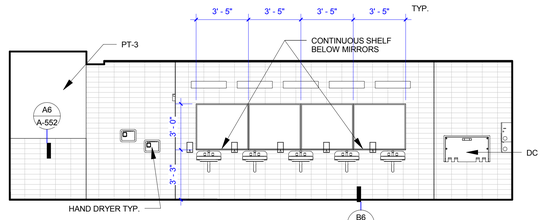

12 WOMEN P141 - EAST
SCALE : 1/4" = 1'-0"

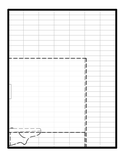

13 WOMEN P141 - NORTH
SCALE : 1/4" = 1'-0"

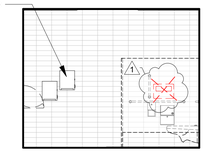

14 WOMEN P141 - SOUTH
SCALE : 1/4" = 1'-0"

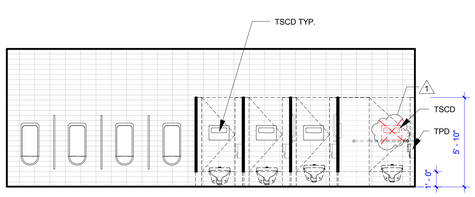

15 MEN P140 - EAST
SCALE : 1/4" = 1'-0"

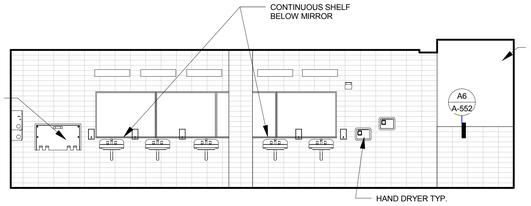

16 MEN P140 - WEST
SCALE : 1/4" = 1'-0"

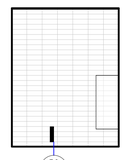

17 MEN P140 - NORTH
SCALE : 1/4" = 1'-0"

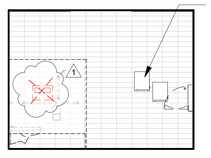

18 MEN P140 - SOUTH
SCALE : 1/4" = 1'-0"

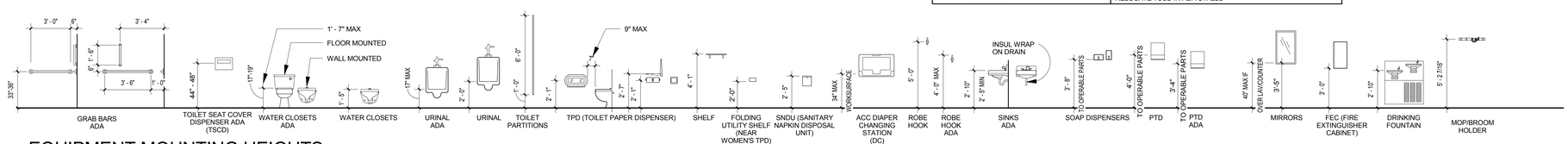

EQUIPMENT MOUNTING HEIGHTS
SCALE : 1/4" = 1'-0"

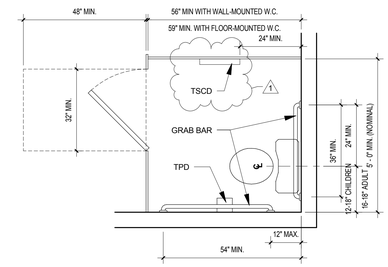

A5 TYP WC PLAN
SCALE : 1/2" = 1'-0"

TILE LEGEND

- CT-6 WHITE
- CT-9 DARK TAUPE
- CT-8 MEDIUM TAUPE
- CT-7 BLUE

TILE PATTERN TYPES

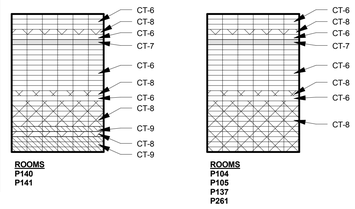

INTERIOR ELEVATIONS GENERAL NOTES

1. DO NOT SCALE DRAWINGS. REFER TO DIMENSIONS.
2. ALL WALL MATERIAL OR PAINT COLOR TRANSITIONS TO OCCUR AT NEAREST INSIDE CORNER, UNO.
3. REFER TO FINISH LEGEND AND FINISH SCHEDULE IN SPECIFICATIONS FOR ADDITIONAL INFORMATION ON FLOOR, WALL AND CEILING FINISHES.
4. PROVIDE 1" MINIMUM SCRIBE WHERE CASEWORK MEETS WALL, UNO.
5. EXISTING ROUND COLUMNS ADJACENT TO NEW TILE FLOORING TO HAVE CERAMIC TILE WALL BASE OF CTB-2, UNO. EXISTING COLUMNS ADJACENT TO NEW CARPET OR EXPOSED CONCRETE TO HAVE RUBBER BASE TO MATCH THAT ROOM, PER THE FINISH SCHEDULE, UNO.
6. WALL GRILLES & REGISTERS TO BE FIELD PAINTED TO MATCH ADJ WALLS
7. WALL MOUNTED ELECTRICAL OUTLETS, SWITCHES, FIRE STORAGE, EXIT SIGNS, CARD READERS, ETC SHOWN FOR CLARITY & REFERENCE ONLY. REFER TO ELECTRICAL DWGS FOR MORE INFORMATION.

KEYNOTE LEGEND

KEY VALUE	KEYNOTE TEXT
P29	ALL PUBLIC TOILET STALLS TO RECIEVE BREAK AWAY ROBE HOOKS ON STALL SIDE. PER SPECIFICATIOS.

Spokane Transit	COFFMAN ENGINEERS	ADDENDUM # 1				
ALSC		DATE	DRAWN	DWG. NO.	JOB NO.	REF. SHT.
		8-12-15	STT	A-07	15-STA-512	A-411
PROJECT STA PLAZA UPGRADE 15-STA-512		DESCRIPTION RELOCATE TSCD IN ADA STALLS				

COFFMAN ENGINEERS
10 N. Post Street, Suite 500
Spokane, WA 99201
ph 509.328.2994
fax 509.328.2999
coffman.com
LASTING creativity | results | relationships

ALSC
203 North Washington, Suite 400
Spokane, WA 99201
509.838.8568 - phone
509.458-3710 - fax
6500 Mineral Drive, Suite 101
Coeur d'Alene, ID 83815
208.676.8292 phone
www.alscarchitects.com

4575 REGISTERED ARCHITECT JEFFERSON WARNER STATE OF WASHINGTON
STAMP

SHEET TITLE: ENLARGED PLANS & ELEVATIONS - RESTROOMS
PROJECT NAME & ADDRESS: STA PLAZA UPGRADE, 701 W. Riverside Ave. Spokane, WA 99201

CLIENT INFORMATION: Spokane Transit Authority, 1230 W. Boone Avenue, Spokane, Washington 99201

BID SET

REVISIONS

No.	Date	By
1	8-12-15	

PROJ. NO.	15-STA-512
DRAWN	STT
CHECKED	JJW
DATE	7-31-15

SHEET: A-411

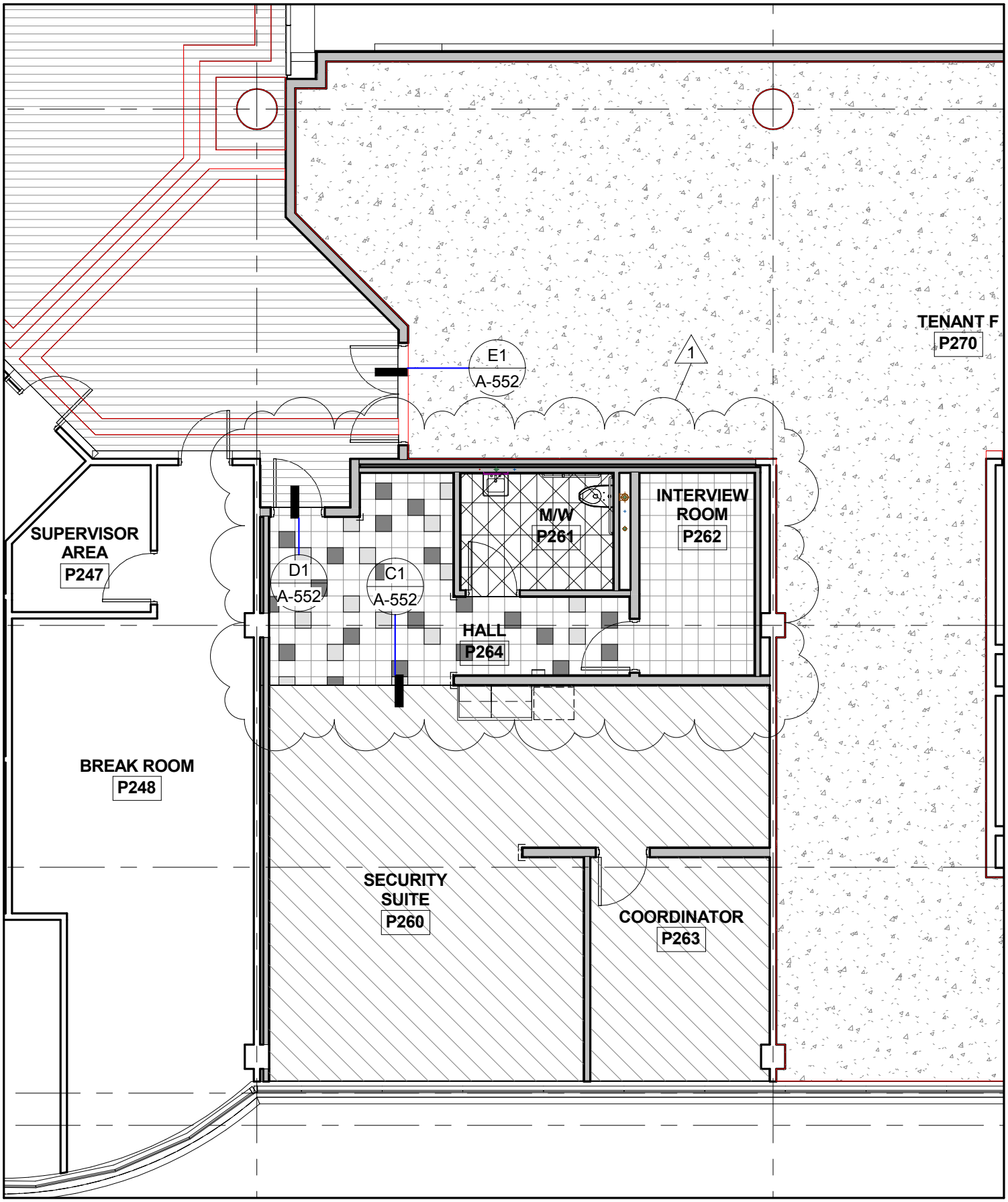

Spokane Transit

COFFMAN ENGINEERS
10 N. Post Street, Suite 500 | Spokane, WA 9920
ph 509.328.2994 | fax 509.328.2999
coffman.com
LASTING

ALSC ARCHITECTS

ADDENDUM # 1

DATE	DRAWN	DWG. NO.	JOB NO.	REF. SHT.
8-12-15	STT	A-08	15-STA-512	A-721

PROJECT STA PLAZA UPGRADE
15-STA-512

DESCRIPTION
VCT TILE PATTERN RM P264. MATERIAL DESIGNATION RM P261

KEY VALUE	KEYNOTE TEXT
P13	EXISTING PLANTERS TO BE INFILLED. SEE WALL SECTIONS FOR MORE INFORMATION
P22	EXISTING EXPANSION JOINT

VCT LEGEND

VCT-1

VCT-2

VCT-3

SHEET TITLE

1

Spokane Transit

COFFMAN ENGINEERS
10 N. Post Street, Suite 500 | Spokane, WA 9920
ph 509.328.2994 | fax 509.328.2999
coffman.com
LASTING
ALSC ARCHITECTS

ADDENDUM # 1

DATE	DRAWN	DWG. NO.	JOB NO.	REF. SHT.
8-12-15	STT	A-09	15-STA-512	A-721

PROJECT STA PLAZA UPGRADE
15-STA-512

DESCRIPTION
ADD VCT TILE LEGEND

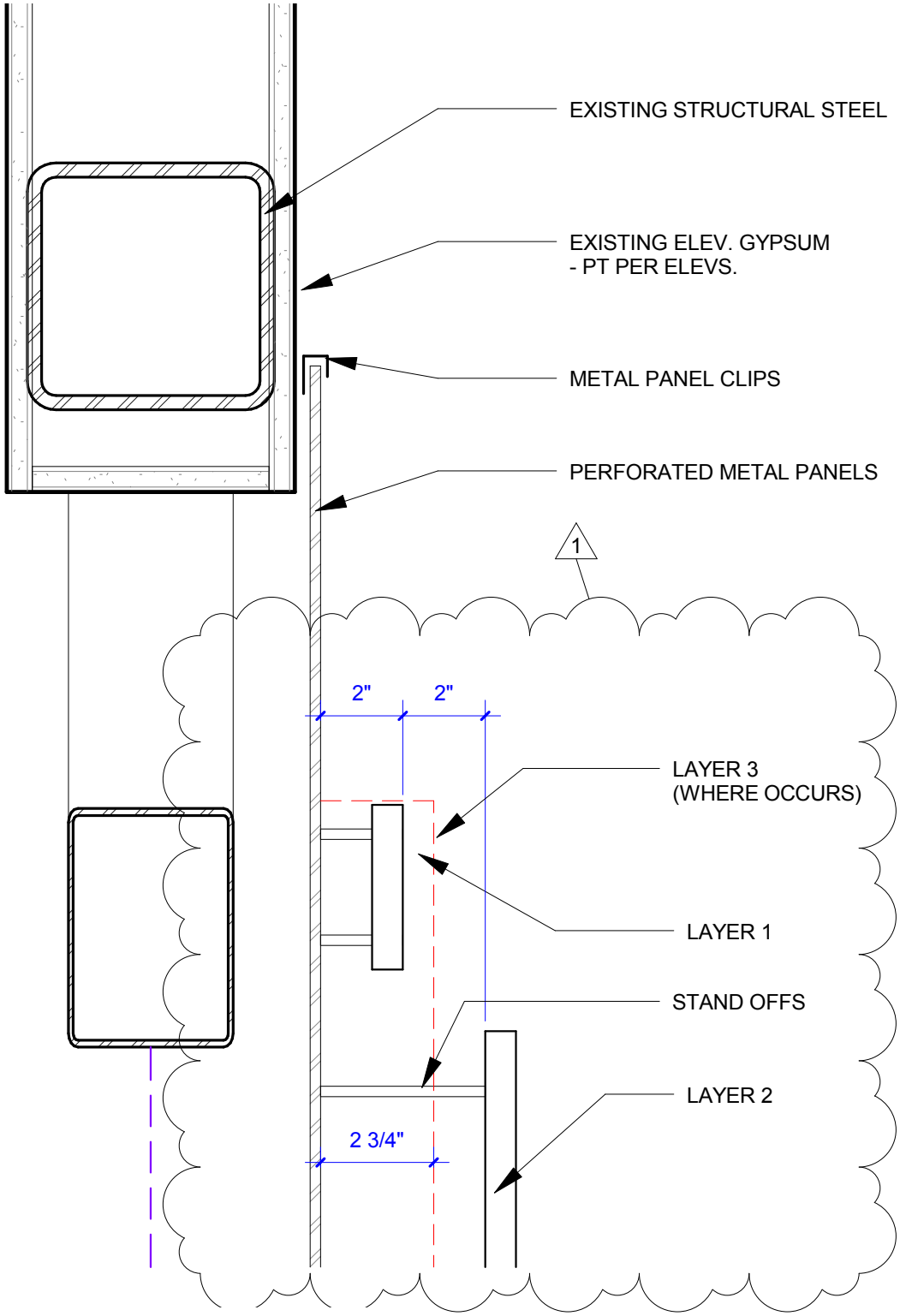

A4

PLAN SECTION

SCALE : 3" = 1'-0"

Spokane Transit

COFFMAN ENGINEERS
10 N. Post Street, Suite 500 | Spokane, WA 9920
ph 509.328.2994 | fax 509.328.2999
coffman.com
LASTING
ALSC ARCHITECTS

PROJECT STA PLAZA UPGRADE
15-STA-512

ADDENDUM # 1

DATE	DRAWN	DWG. NO.	JOB NO.	REF. SHT.
8-12-15	STT	A-10	15-STA-512	A-402

DESCRIPTION
ADD LEVEL 3 LOCATION

C4

ELEVATOR - LAYER 3 - LIGHTING

C3

SCALE : 1/4" = 1'-0"

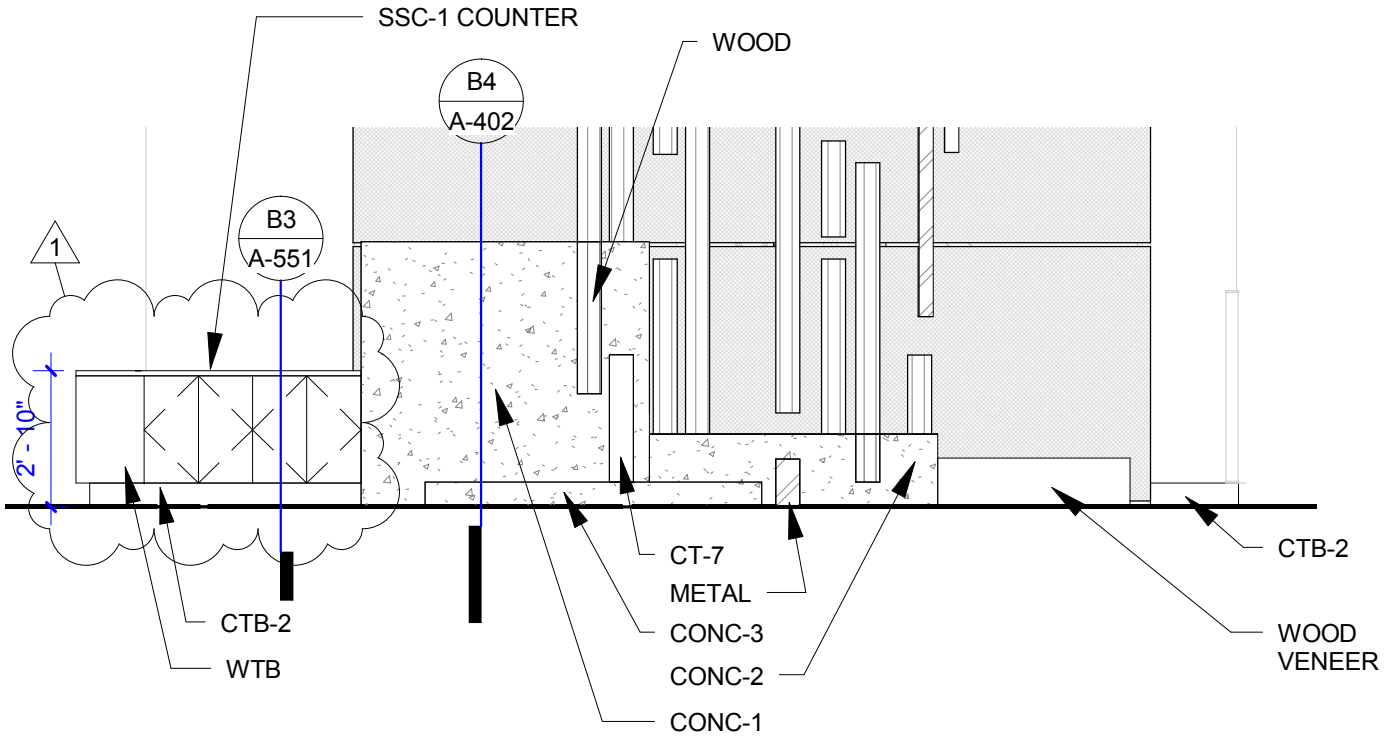

STATUE BASE ELEV

B3

SCALE : 1/4" = 1'-0"

Spokane Transit

COFFMAN ENGINEERS
10 N. Post Street, Suite 500 | Spokane, WA 99201
ph 509.328.2994 | fax 509.328.2999
coffman.com
LASTING

ALSC ARCHITECTS

PROJECT STA PLAZA UPGRADE
15-STA-512

ADDENDUM # 1

DATE	DRAWN	DWG. NO.	JOB NO.	REF. SHT.
8-12-15	STT	A-11	15-STA-512	A-402

DESCRIPTION
CABINET ADDITION

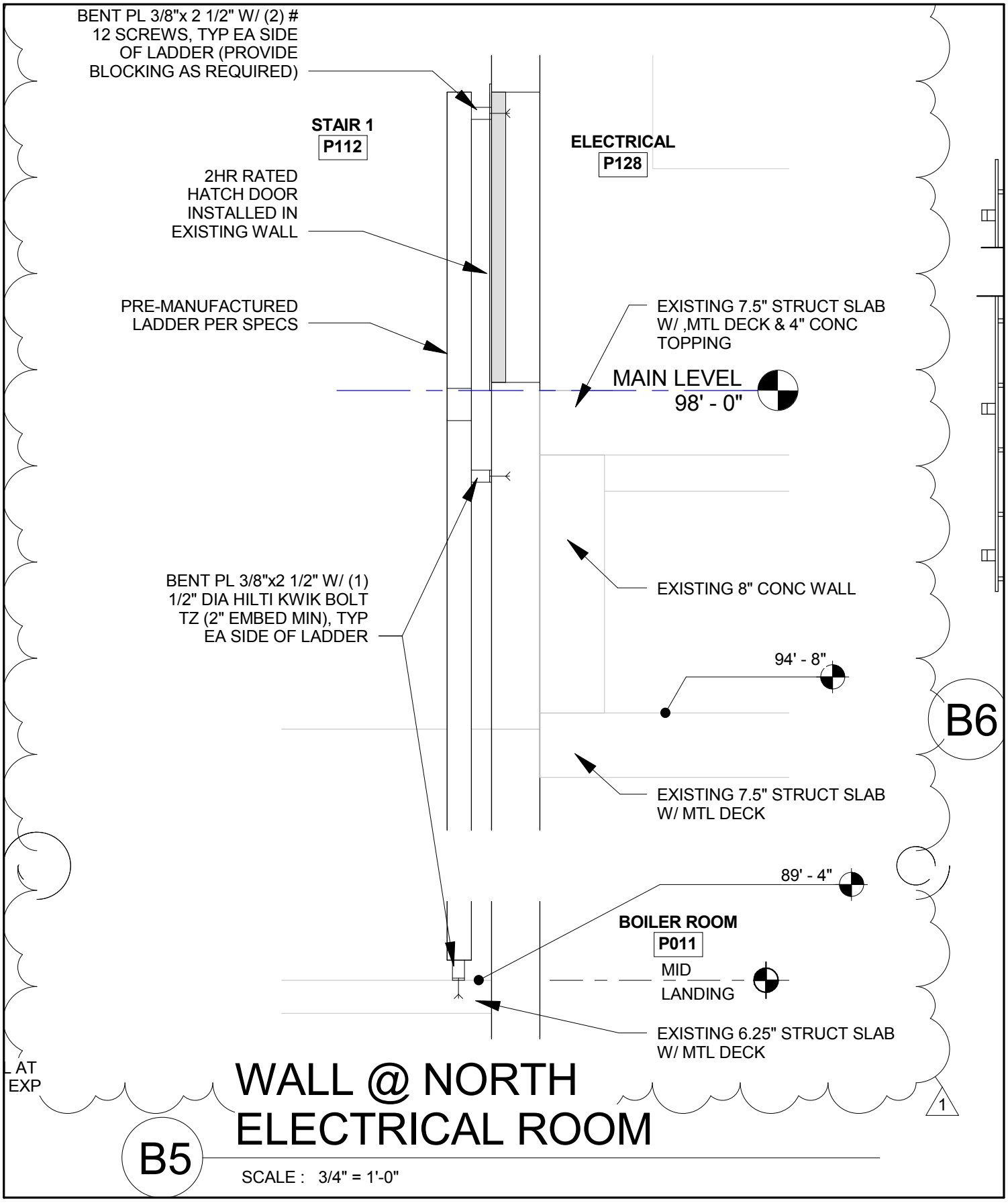

WALL @ NORTH ELECTRICAL ROOM

B5

SCALE : 3/4" = 1'-0"

Spokane Transit

COFFMAN ENGINEERS
10 N. Post Street, Suite 500 | Spokane, WA 99201
ph 509.328.2994 | fax 509.328.2999
coffman.com
LASTING

ALSC ARCHITECTS

PROJECT STA PLAZA UPGRADE
15-STA-512

ADDENDUM #

DATE	DRAWN	DWG. NO.	JOB NO.	REF. SHT.
8-12-15	KHR	A-12	15-STA-512	A-501

DESCRIPTION
DETAIL UPDATE

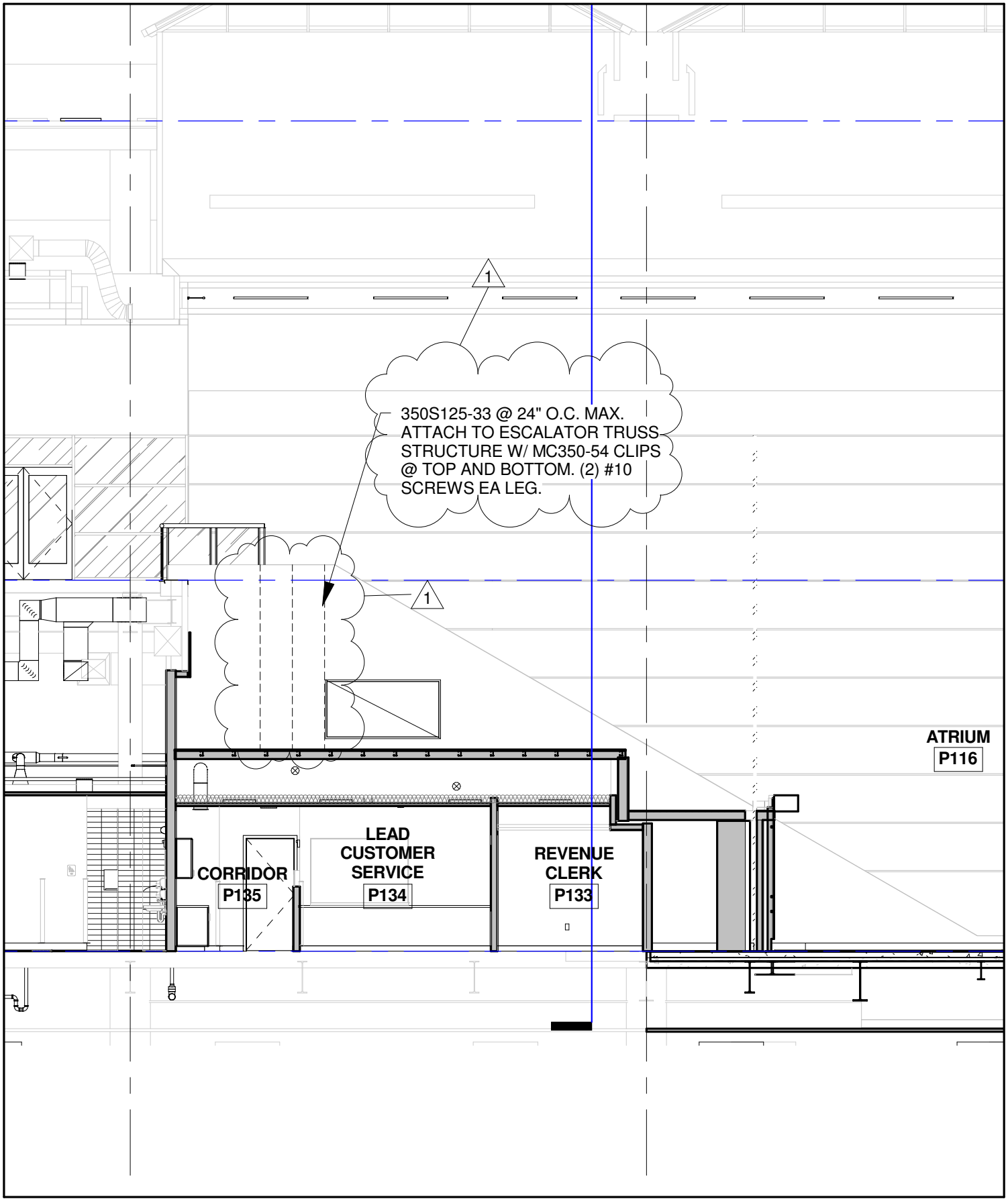

Spokane Transit

COFFMAN ENGINEERS
10 N. Post Street, Suite 300 | Spokane, WA 99201
ph 509.328.2994 | fax 509.328.2999
coffman.com
LASTING creativity | results | relationships

ALSC ARCHITECTS

PROJECT STA PLAZA UPGRADE
15-STA-512

ADDENDUM # 1

DATE	DRAWN	DWG. NO.	JOB NO.	REF. SHT.
8-12-15	KHR	A-13	15-STA-512	A-303

DESCRIPTION
FRAMING AT ESCALATOR

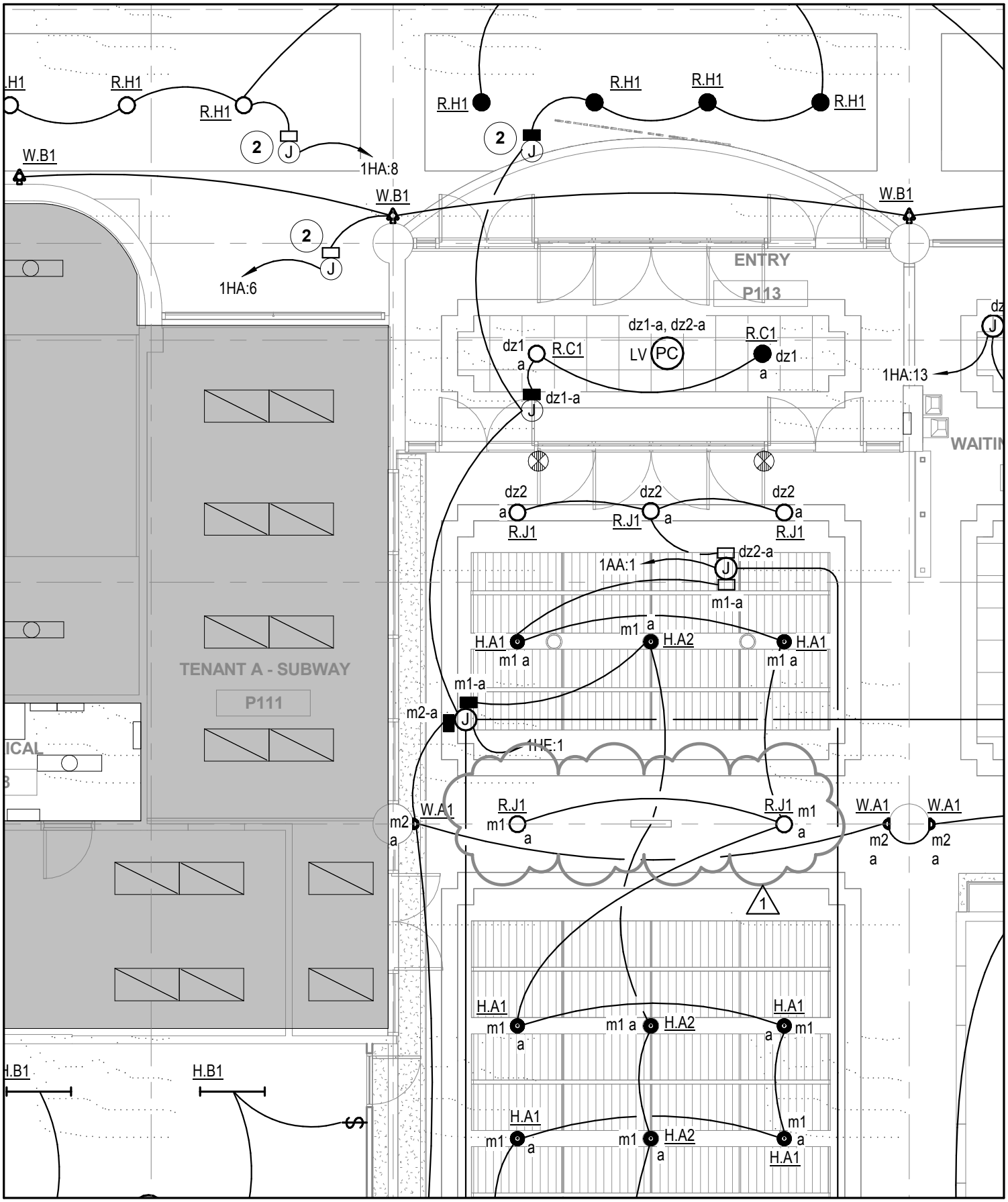

Spokane Transit	COFFMAN ENGINEERS 10 N. Post Street, Suite 500 | Spokane, WA 9920 ph 509.328.2994 | fax 509.328.2999 coffman.com LASTING	ADDENDUM # 1		
	ALSC ARCHITECTS	DATE 08/13/15	DRAWN LAI	DWG. NO. E-01
PROJECT STA PLAZA UPGRADE 15-STA-512		JOB NO. 15-STA-512	REF. SHT. E-102	
		DESCRIPTION LUMINAIRE CHANGE		

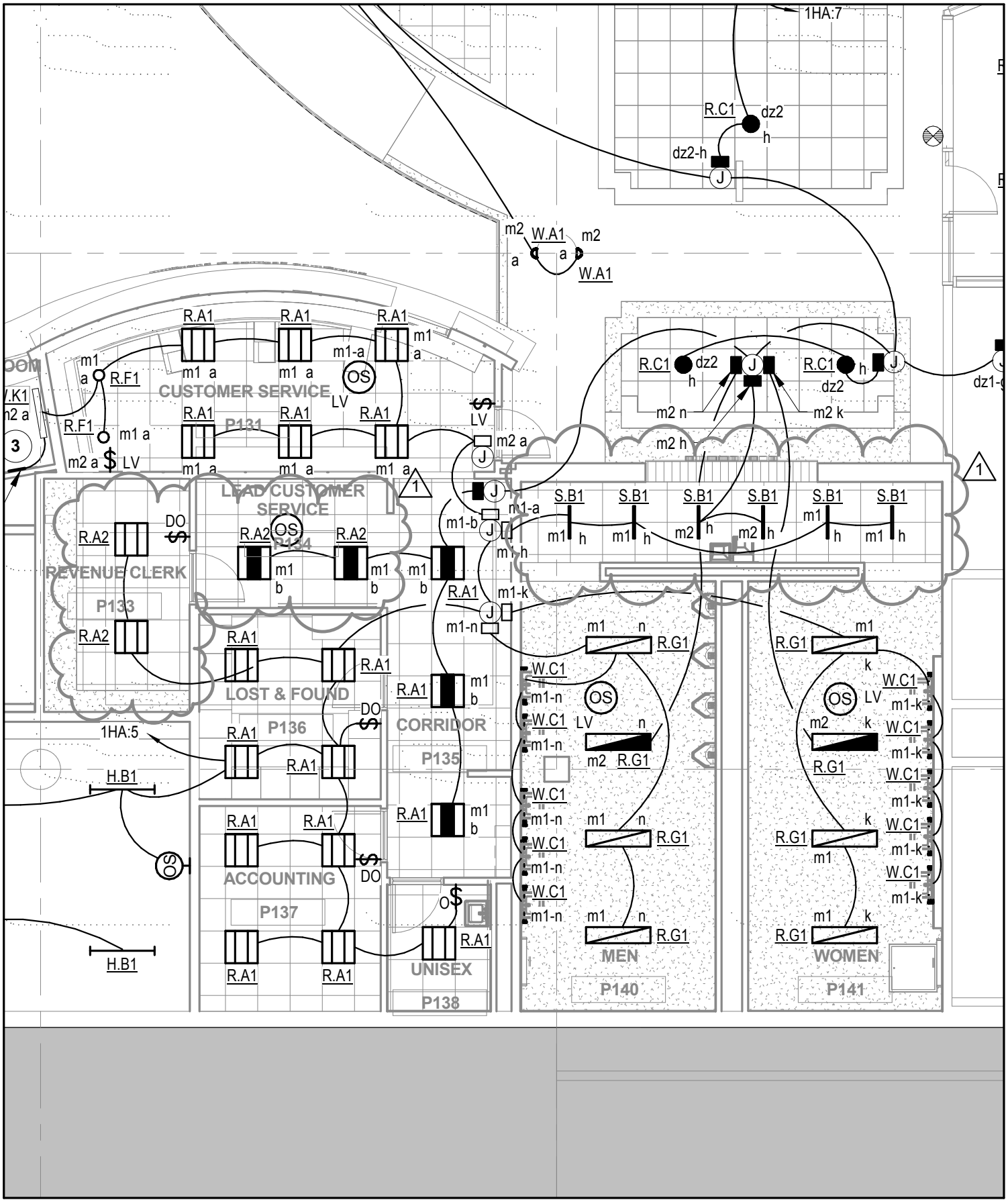

Spokane Transit	COFFMAN ENGINEERS 10 N. Post Street, Suite 500 | Spokane, WA 99201 ph 509.328.2994 | fax 509.328.2999 coffman.com LASTING	ADDENDUM # 1		
	ALSC ARCHITECTS	DATE 08/13/15	DRAWN LAI	DWG. NO. E-02
		JOB NO. 15-STA-512	REF. SHT. E-102	
PROJECT STA PLAZA UPGRADE 15-STA-512		DESCRIPTION LUMINAIRE CHANGE		

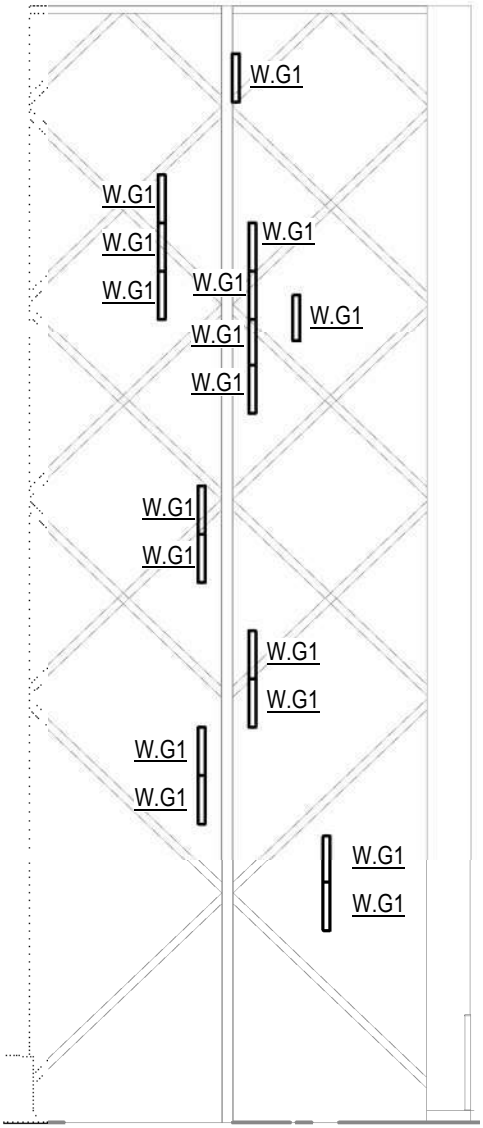

1

DETAIL NOTES:

1. ALL CABLING TO LUMINARIES SHALL BE ALIGNED WITH STRUCTURE.
2. ALL JUNCTION BOXES FOR LUMINAIRE CABLING SHALL BE LOCATED OUT OF SIGHT ALONG THE SIDE WALLS.
3. ALL REMOTE DRIVERS AND DMX CONTROLS SHALL BE LOCATED IN CABINETRY AT THE BASE. COORDINATE MOUNTING LOCATION WITHIN THE CABINETRY WITH ARCHITECT.

ELEVATOR WALL LIGHTING ELEVATION

A6

SCALE : 1/8" = 1'-0"

Spokane Transit

COFFMAN ENGINEERS
10 N. Post Street, Suite 500 | Spokane, WA 9920
ph 509.328.2994 | fax 509.328.2999
coffman.com
LASTING
ALSC ARCHITECTS

ADDENDUM # 1

DATE	DRAWN	DWG. NO.	JOB NO.	REF. SHT.
08/13/15	LAI	E-03	15-STA-512	E-102

PROJECT STA PLAZA UPGRADE
15-STA-512

DESCRIPTION
LUMINAIRE CHANGE

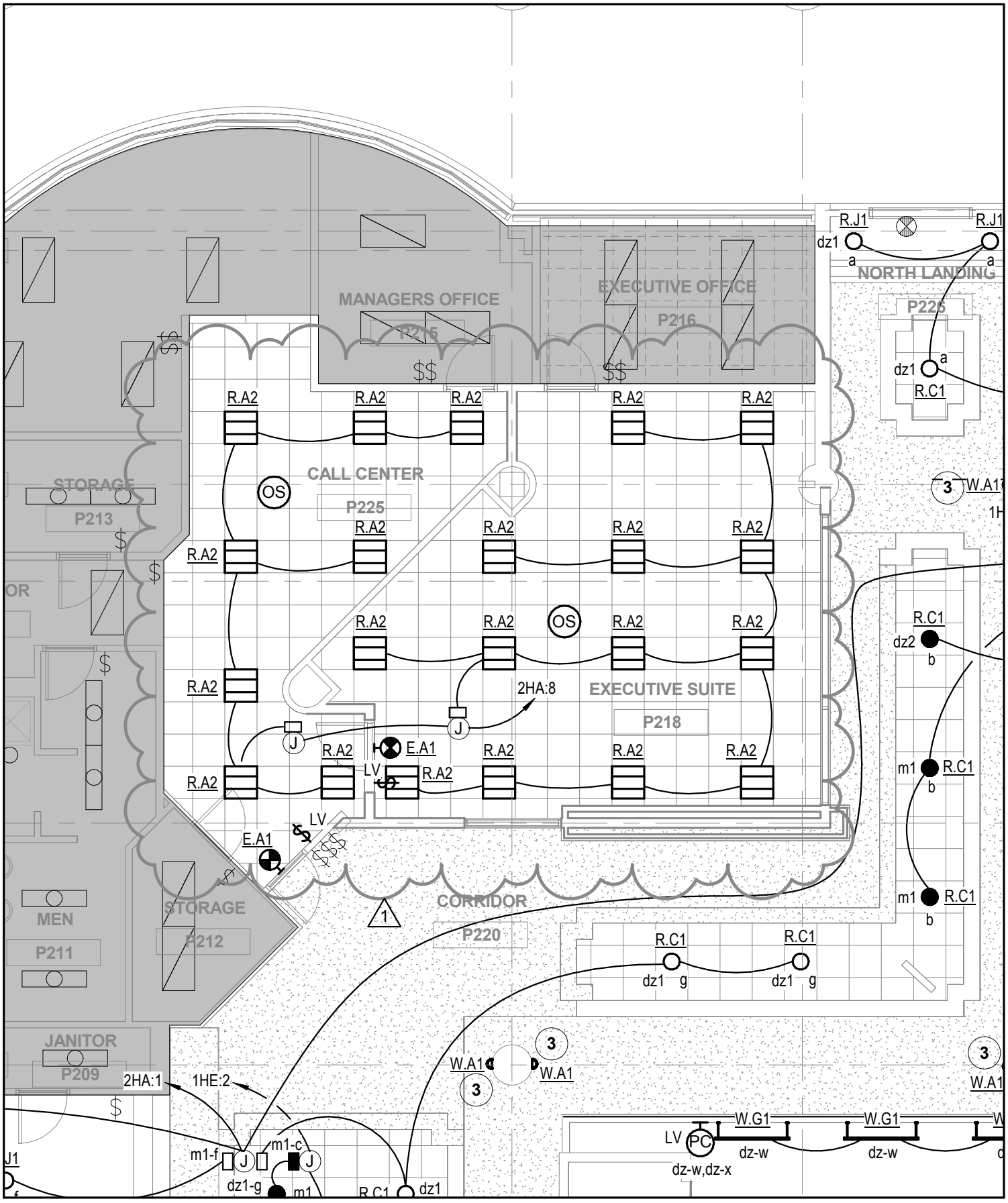

Spokane Transit	COFFMAN ENGINEERS 10 N. Post Street, Suite 500 | Spokane, WA 99201 ph 509.328.2994 | fax 509.328.2999 coffman.com LASTING	ADDENDUM # 1		
	ALSC ARCHITECTS	DATE 8/13/2015	DRAWN LAI	DWG. NO. E-04
		JOB NO. 15-STA-512	REF. SHT. E-103	
PROJECT STA PLAZA UPGRADE 15-STA-512		DESCRIPTION LUMINAIRE TYPE CHANGE		

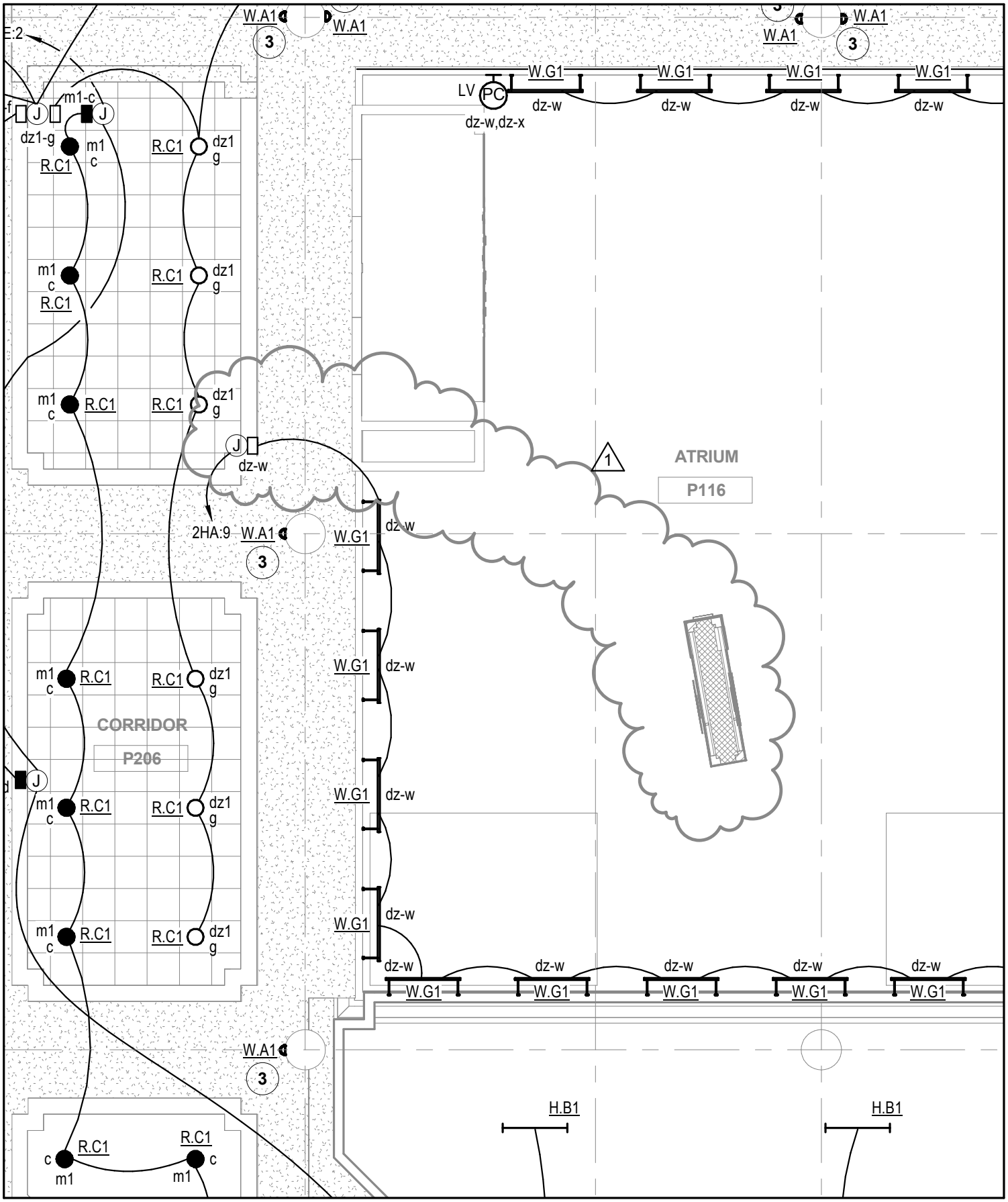

Spokane Transit	COFFMAN ENGINEERS 10 N. Post Street, Suite 500 | Spokane, WA 99201 ph 509.328.2994 | fax 509.328.2999 coffman.com LASTING	ADDENDUM # 1		
	ALSC ARCHITECTS	DATE 8/13/2015	DRAWN LAI	DWG. NO. E-05	JOB NO. 15-STA-512	REF. SHT. E-103
PROJECT STA PLAZA UPGRADE 15-STA-512		DESCRIPTION REMOVAL OF LUMINAIRES		

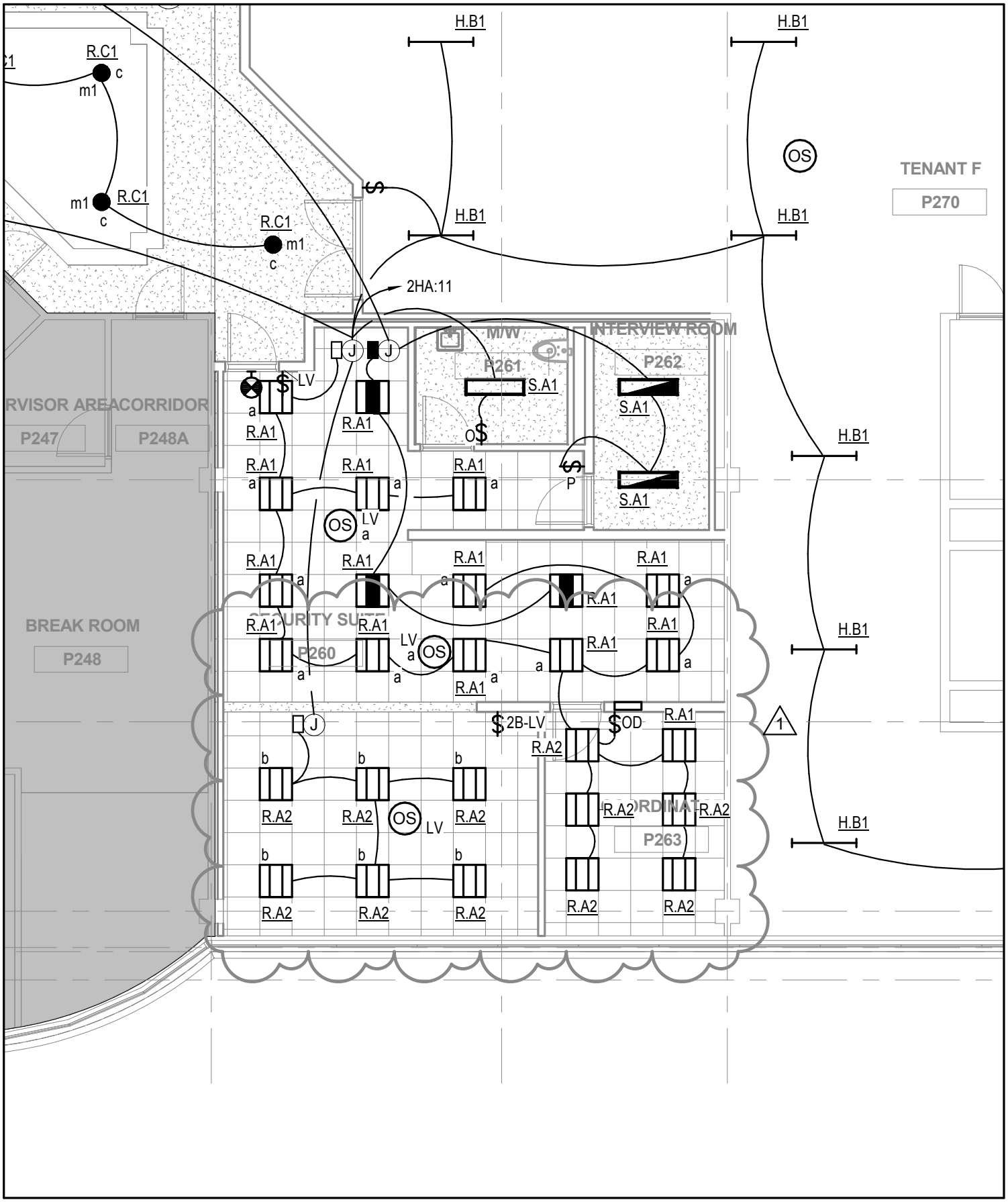

Spokane Transit	COFFMAN ENGINEERS 10 N. Post Street, Suite 500 | Spokane, WA 99201 ph 509.328.2994 | fax 509.328.2999 coffman.com LASTING	ADDENDUM # 1		
	ALSC ARCHITECTS	DATE 8/13/2015	DRAWN LAI	DWG. NO. E-06	JOB NO. 15-STA-512	REF. SHT. E-103
PROJECT STA PLAZA UPGRADE 15-STA-512		DESCRIPTION LUMINAIRE TYPE CHANGE				

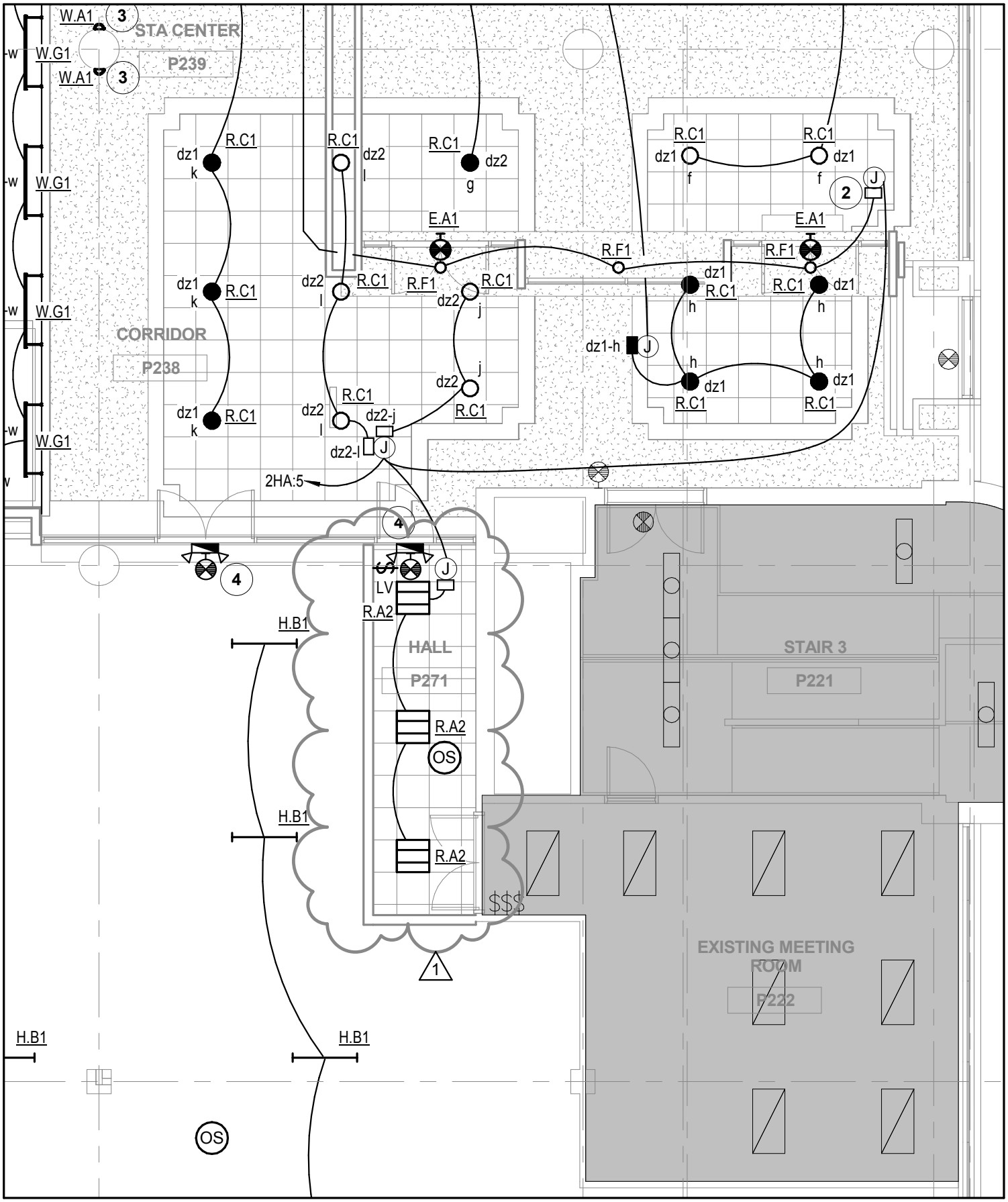

Spokane Transit	COFFMAN ENGINEERS 10 N. Post Street, Suite 500 | Spokane, WA 99201 ph 509.328.2994 | fax 509.328.2999 coffman.com LASTING	ADDENDUM # 1		
	ALSC ARCHITECTS	DATE 8/13/2015	DRAWN LAI	DWG. NO. E-07	JOB NO. 15-STA-512	REF. SHT. E-103
PROJECT STA PLAZA UPGRADE 15-STA-512		DESCRIPTION LUMINAIRE TYPE CHANGE		

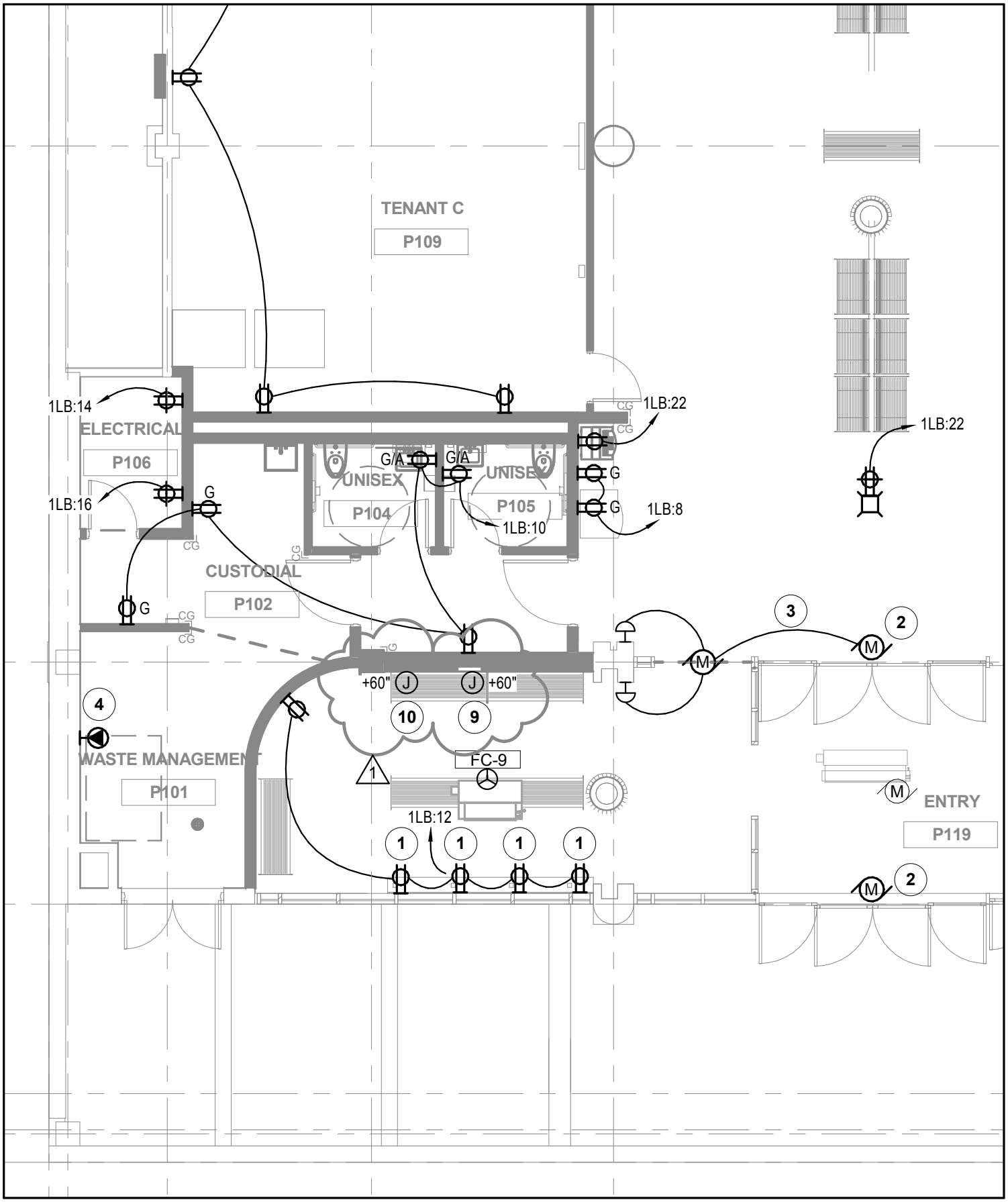

Spokane Transit

COFFMAN ENGINEERS
10 N. Post Street, Suite 500 | Spokane, WA 9920
ph 509.328.2994 | fax 509.328.2999
coffman.com
LASTING

ALSC ARCHITECTS

PROJECT STA PLAZA UPGRADE
15-STA-512

ADDENDUM # 1

DATE	DRAWN	DWG. NO.	JOB NO.	REF. SHT.
08/13/15	ACB	E-08	15-STA-512	E-112

DESCRIPTION
CAD/AVL REVISION

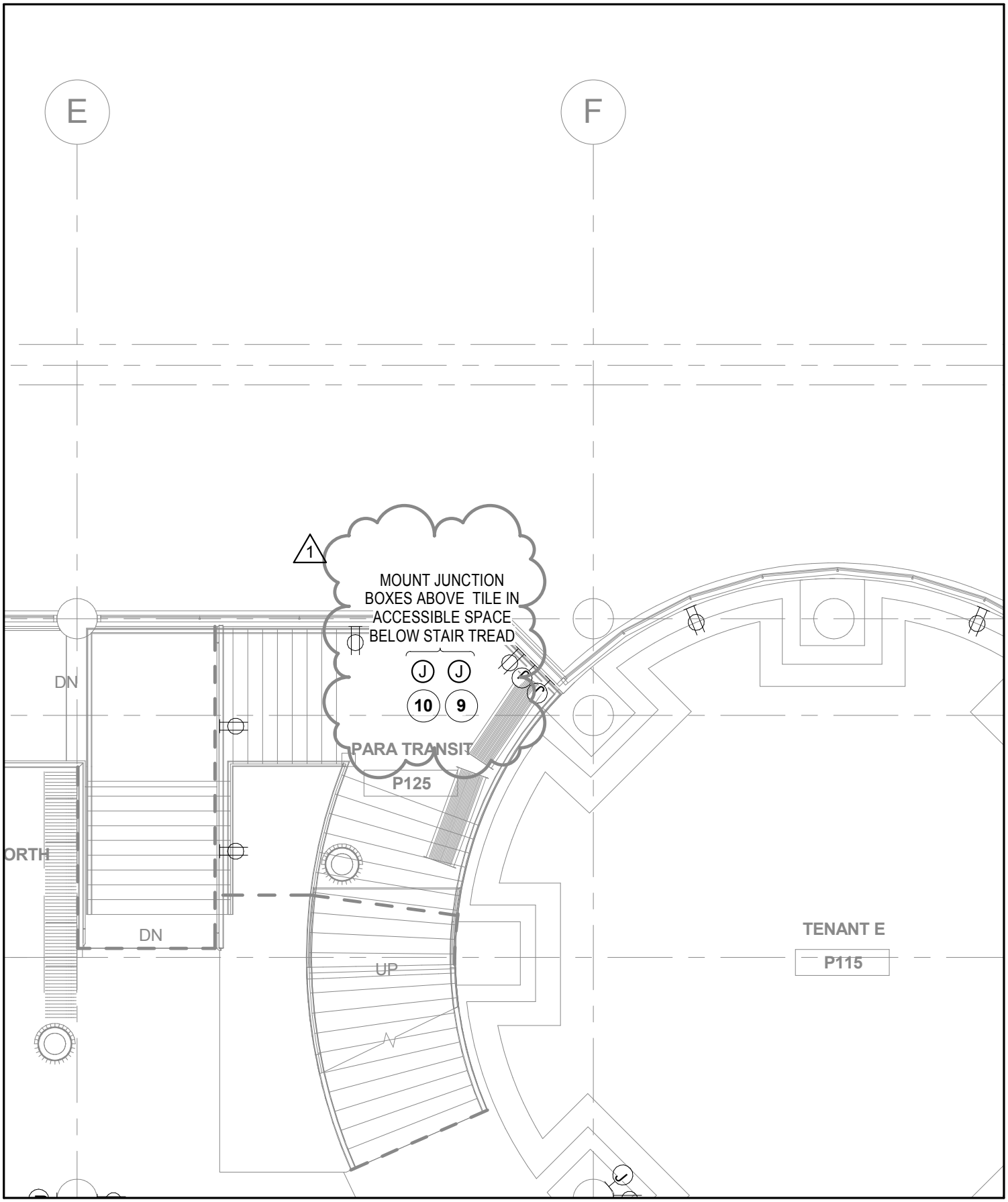

Spokane Transit

COFFMAN ENGINEERS
10 N. Post Street, Suite 500 | Spokane, WA 9920
ph 509.328.2994 | fax 509.328.2999
coffman.com
LASTING

ALSC ARCHITECTS

PROJECT STA PLAZA UPGRADE
15-STA-512

ADDENDUM # 1

DATE	DRAWN	DWG. NO.	JOB NO.	REF. SHT.
08/13/15	ACB	E-09	15-STA-512	E-112

DESCRIPTION
CAD/AVL REVISION

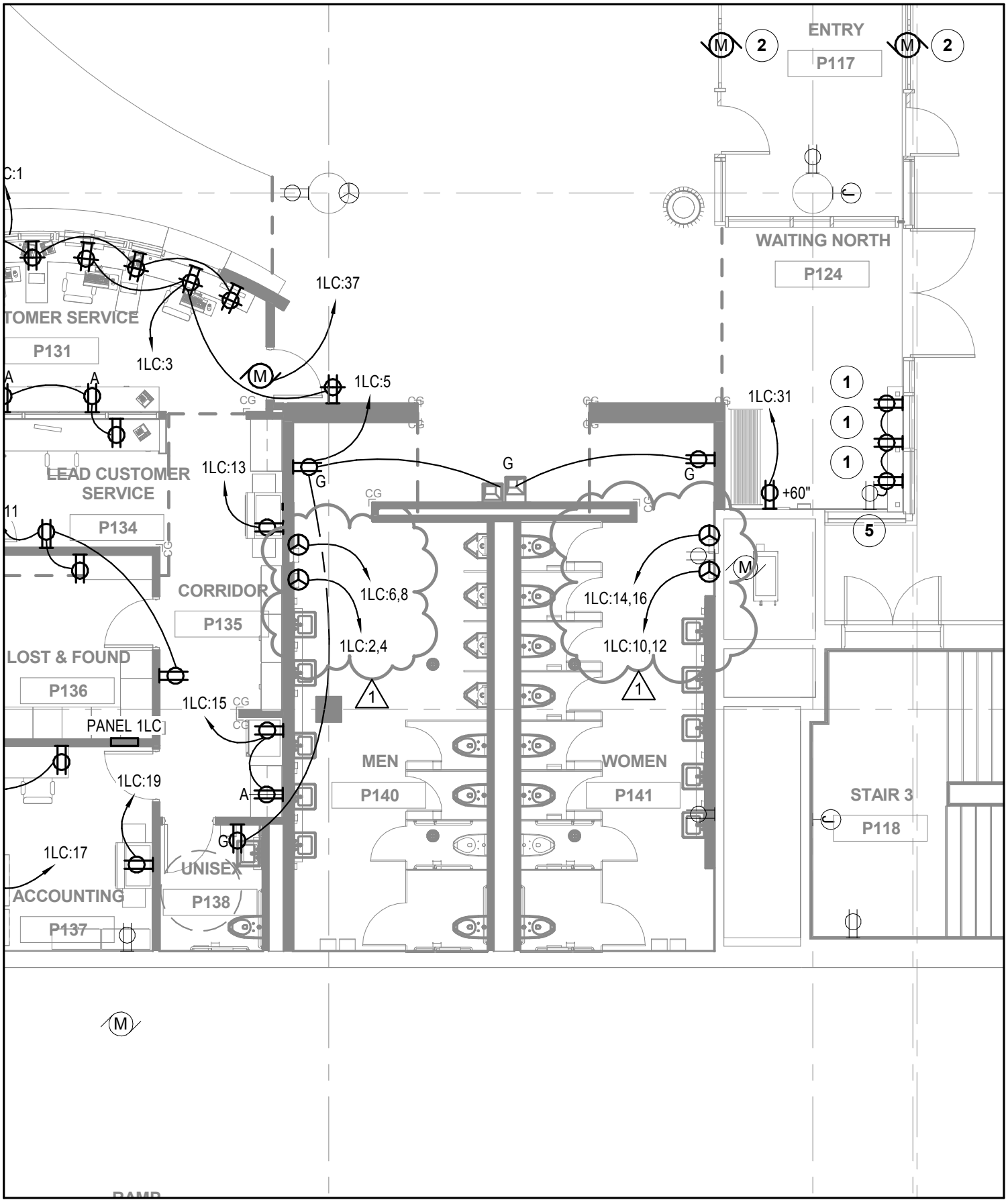

Spokane Transit	COFFMAN ENGINEERS 10 N. Post Street, Suite 500 | Spokane, WA 99201 ph 509.328.2994 | fax 509.328.2999 coffman.com LASTING	ADDENDUM # 1		
	ALSC ARCHITECTS	DATE 08/13/15	DRAWN ACB	DWG. NO. E-10
		JOB NO. 15-STA-512	REF. SHT. E-112	
PROJECT STA PLAZA UPGRADE 15-STA-512		DESCRIPTION HAND DRYERS IN RESTROOMS		

SECTION 033543 - POLISHED CONCRETE FINISHING

PART 1 - GENERAL

1.1 RELATED DOCUMENTS

A. Drawings and general provisions of the Contract, including General and Supplementary Conditions and Division 01 Specification Sections, apply to this Section.

1.2 SUMMARY

A. Section includes polished concrete finishing and integral color pigment.

1. Concrete for polished concrete, including formwork, reinforcement, concrete materials, mixture design, integral color, placement procedures, initial finishing, and curing is specified in Section 033000 "Cast-in-Place Concrete."

B. Related Requirements:

1. Structural Notes: "Cast-in-Place Concrete" for concrete not designated as polished concrete.

2. Finishes legend for integral colors.

1.3 DEFINITIONS

A. Design Reference Sample: Sample designated by Architect in the Contract Documents that reflects acceptable surface quality and appearance of polished concrete.

1.4 ACTION SUBMITTALS

A. Product Data: For each type of product.

B. Samples for Initial Selection: For each type of product requiring color selection.

C. Samples for Verification: For each type of exposed color.

1.5 INFORMATIONAL SUBMITTALS

A. Qualification Data: For Installer.

B. Material Certificates: For each of the following, signed by manufacturers:

1. Repair materials.
2. Stain materials.

3. Liquid floor treatments.

1.6 QUALITY ASSURANCE

A. Mockups: Before casting concrete, build mockups to verify selections made under Sample submittals and to demonstrate typical joints, surface finish, tolerances, and standard of workmanship. Build mockups to comply with the following requirements, using materials indicated for the completed Work:

1. Build mockups in the location and of the size indicated or, if not indicated, as directed by Architect.

a. Size and Shape: Concrete cube 24 inches on all sides.

2. Demonstrate curing, finishing, and protecting of polished concrete.

1.7 FIELD CONDITIONS

A. Traffic Control: Maintain access for vehicular and pedestrian traffic as required for other construction activities.

PART 2 - PRODUCTS

2.1 STAIN MATERIALS

A. Penetrating Stain: Water-based, acrylic latex, penetrating stain with colorfast pigments.

1. Basis of Design Manufacturer: Scofield, L.M. Company.

2.2 LIQUID FLOOR TREATMENTS

A. Penetrating Liquid Treatments for Polished Concrete Finish: Clear, waterborne solution of inorganic silicate or siliconate materials and proprietary components; odorless; that penetrates, hardens, and is suitable for polished concrete surfaces.

1. Manufacturers: Subject to compliance with requirements, provide products by one of the following:

a. Advanced Floor Products.
b. ARDEX Americas.
c. AWRC Corporation.
d. Euclid Chemical Company (The); an RPM company.
e. L&M Construction Chemicals, Inc.
f. QuestMark.
g. Vexcon Chemicals Inc.

PART 3 - EXECUTION

3.1 POLISHING

A. Polish: Level 3: High sheen, 800 grit.

B. Apply polished concrete finish system to cured and prepared concrete to match accepted mockup.

1. Machine grind surfaces to receive polished and smooth and to depth required to reveal aggregate to match approved mockup.
2. Apply penetrating liquid floor treatment for polished concrete in polishing sequence and according to manufacturer's written instructions, allowing recommended drying time between successive coats.
3. Apply penetrating stain for polished concrete in polishing sequence and according to manufacturer's written instructions.
4. Continue polishing with progressively finer-grit diamond polishing pads to gloss level, to match approved mockup.
5. Control and dispose of waste products produced by grinding and polishing operations.
6. Neutralize and clean polished surfaces.

3.2 STAINING

A. Prepare surfaces according to manufacturer's written instructions and as follows:

1. Clean concrete thoroughly by scraping, applying solvents or stripping agents, or scrubbing with detergents recommended by stain manufacturer. Rinse until water is clear and allow surface to dry.
2. Test surfaces with droplets of water. If water beads and does not penetrate surface, or penetrates only in some areas, profile surfaces by grinding, sanding, or abrasive blasting. Retest and continue profiling surface until water droplets immediately darken and uniformly penetrate concrete surfaces.
3. Apply acidic solution to dampened concrete surfaces, scrubbing with uncolored, acid-resistant nylon-bristle brushes until bubbling stops and concrete surface has texture of 120-grit sandpaper. Do not allow solution to dry on concrete surfaces. Rinse until water is clear. Control, collect, and legally dispose of runoff.
4. Neutralize concrete surfaces and rinse until water is clear. Test surface for residue with clean white cloth. Test surface according to ASTM F 710 to ensure pH is between 7 and 8.

B. Allow concrete surface to dry before applying stain. Verify readiness of concrete to receive stain according to ASTM D 4263 by tightly taping 18-by-18-inch (450-by-450-mm), 4-mil-(0.1-mm-) thick polyethylene sheet to a representative area of concrete surface. Apply stain only if no evidence of moisture has accumulated under sheet after 16 hours.

C. Penetrating Stain: Apply penetrating stain to concrete surfaces according to manufacturer's written instructions and as follows:

1. Apply first coat of stain to dry, clean surfaces by airless sprayer or by high-volume, low-pressure sprayer.
2. Allow to dry four hours and repeat application of stain in sufficient quantity to obtain color consistent with approved mockup.
3. Rinse until water is clear. Control, collect, and legally dispose of runoff.

END OF SECTION 03 35 43

SECTION 061600 - SHEATHING

PART 1 - GENERAL

1.1 RELATED DOCUMENTS

A. Drawings and general provisions of the Contract, including General and Supplementary Conditions and Division 01 Specification Sections, apply to this Section.

1.2 SUMMARY

A. Section Includes:

1. Wall sheathing.
2. Underlayment.

1.3 ACTION SUBMITTALS

A. Product Data: For each type of process and factory-fabricated product. Indicate component materials and dimensions and include construction and application details.

1. Include data for fire-retardant treatment from chemical treatment manufacturer and certification by treating plant that treated plywood complies with requirements. Include physical properties of treated materials.
2. For fire-retardant treatments, include physical properties of treated plywood both before and after exposure to elevated temperatures, based on testing by a qualified independent testing agency according to ASTM D 5516.

1.4 INFORMATIONAL SUBMITTALS

A. Evaluation Reports: For the following, from ICC-ES:

1. Fire-retardant-treated plywood.

1.5 QUALITY ASSURANCE

A. Testing Agency Qualifications: For testing agency providing classification marking for fire-retardant-treated material, an inspection agency acceptable to authorities having jurisdiction that periodically performs inspections to verify that the material bearing the classification marking is representative of the material tested.

1.6 DELIVERY, STORAGE, AND HANDLING

A. Stack panels flat with spacers beneath and between each bundle to provide air circulation. Protect sheathing from weather by covering with waterproof sheeting, securely anchored. Provide for air circulation around stacks and under coverings.

PART 2 - PRODUCTS

2.1 PERFORMANCE REQUIREMENTS

A. Fire-Resistance Ratings: As tested according to ASTM E 119; testing by a qualified testing agency. Identify products with appropriate markings of applicable testing agency.

1. Fire-Resistance Ratings: Indicated by design designations from UL's "Fire Resistance Directory" or from the listings of another qualified testing agency.

2.2 WOOD PANEL PRODUCTS

A. Emissions: Products shall meet the testing and product requirements of the California Department of Public Health's "Standard Method for the Testing and Evaluation of Volatile Organic Chemical Emissions from Indoor Sources Using Environmental Chambers."

B. Thickness: As needed to comply with requirements specified, but not less than thickness indicated.

C. Factory mark panels to indicate compliance with applicable standard.

2.3 FIRE-RETARDANT-TREATED PLYWOOD

A. General: Where fire-retardant-treated materials are indicated, use materials complying with requirements in this article that are acceptable to authorities having jurisdiction and with fire-test-response characteristics specified as determined by testing identical products per test method indicated by a qualified testing agency.

B. Fire-Retardant-Treated Plywood by Pressure Process: Products with a flame-spread index of 25 or less when tested according to ASTM E 84, and with no evidence of significant progressive combustion when the test is extended an additional 20 minutes, and with the flame front not extending more than 10.5 feet (3.2 m) beyond the centerline of the burners at any time during the test.

1. Use treatment that does not promote corrosion of metal fasteners.
2. Interior Type A: Treated materials shall have a moisture content of 28 percent or less when tested according to ASTM D 3201/D 3201M at 92 percent relative humidity. Use where exterior type is not indicated.
3. Design Value Adjustment Factors: Treated lumber plywood shall be tested according to ASTM D 5516 and design value adjustment factors shall be calculated according to ASTM D 6305. Span ratings after treatment shall be not less than span ratings specified.

C. Kiln-dry material after treatment to a maximum moisture content of 15 percent. Do not use material that is warped or does not comply with requirements for untreated material.

D. Identify fire-retardant-treated plywood with appropriate classification marking of qualified testing agency.

E. Application: Treat all plywood unless otherwise indicated.

2.4 WALL SHEATHING

A. Plywood Sheathing: DOC PS 1, sheathing.

1. Nominal Thickness: Per Structural Drawings.

2.5 SUBFLOORING AND UNDERLAYMENT

A. Plywood Combination Subfloor-Underlayment: DOC PS 1, single-floor panels.
1. Nominal Thickness: Per Structural Drawings.
2. Edge Detail: Square.
3. Surface Finish: Fully sanded face.

2.6 FASTENERS

A. General: Provide fasteners of size and type indicated that comply with requirements specified in this article for material and manufacture.

1. For sheathing, provide fasteners with hot-dip zinc coating complying with ASTM A 153/A 153M.

B. Nails, Brads, and Staples: ASTM F 1667.

C. Power-Driven Fasteners: Fastener systems with an evaluation report acceptable to authorities having jurisdiction, based on ICC-ES AC70.

D. Screws for Fastening Wood Structural Panels to Cold-Formed Metal Framing: ASTM C 954, except with wafer heads and reamer wings, length as recommended by screw manufacturer for material being fastened.

2.7 MISCELLANEOUS MATERIALS

A. Adhesives for Field Gluing Panels to Wood Framing: Formulation complying with APA AFG-01 ASTM D 3498 that is approved for use with type of construction panel indicated by manufacturers of both adhesives and panels.

PART 3 - EXECUTION

3.1 INSTALLATION, GENERAL

A. Do not use materials with defects that impair quality of sheathing or pieces that are too small to use with minimum number of joints or optimum joint arrangement. Arrange joints so that pieces do not span between fewer than three support members.

B. Cut panels at penetrations, edges, and other obstructions of work; fit tightly against abutting construction unless otherwise indicated.

C. Securely attach to substrate by fastening as indicated, complying with the following:

1. Table 2304.9.1, "Fastening Schedule," in the ICC's International Building Code.
2. Table R602.3(1), "Fastener Schedule for Structural Members," and Table R602.3(2), "Alternate Attachments," in the ICC's International Residential Code for One- and Two-Family Dwellings.
3. ICC-ES evaluation report for fastener.

D. Use common wire nails unless otherwise indicated. Select fasteners of size that will not fully penetrate members where opposite side will be exposed to view or will receive finish materials. Make tight connections. Install fasteners without splitting wood.

E. Do not bridge building expansion joints; cut and space edges of panels to match spacing of structural support elements.

F. Coordinate sheathing installation with installation of materials installed over sheathing so sheathing is not exposed to precipitation or left exposed at end of the workday when rain is forecast.

3.2 WOOD STRUCTURAL PANEL INSTALLATION

A. General: Comply with applicable recommendations in APA Form No. E30, "Engineered Wood Construction Guide," for types of structural-use panels and applications indicated.

B. Fastening Methods: Fasten panels as indicated below:

1. Wall Sheathing:
   a. Screw to cold-formed metal framing.
   b. Space panels 1/8 inch (3 mm) apart at edges and ends.

2. Underlayment:

   a. Nail to subflooring.
   b. Space panels 1/32 inch (0.8 mm) apart at edges and ends.

END OF SECTION 06 16 00

SECTION 09000 - FINISH SCHEDULE

Room No. & Name		Floor Finish	Base	Walls: North	East	South	West	Ceiling	Remarks
BASEMENT									
P001	TRANSFER VAULT	--	--	--	--	--	--	--	--
P002	TRANSFER VAULT	--	--	--	--	--	--	--	--
P003	TRANSFER VAULT	--	--	--	--	--	--	--	--
P004	MECHANICAL	--	--	--	--	--	--	--	--
P005	ELECTRICAL ROOM	--	--	--	--	--	--	--	--
P006	GENERATOR ROOM	--	--	--	--	--	--	PT-*	* Replace gypsum ceiling as required to perform work on level above. Paint to match existing.
P007	TELEPHONE ROOM	--	--	--	--	--	--	--	--
P008	SERVICE ELEVATOR LOBBY	--	--	--	--	--	--	--	--
P009	CHILLER ROOM	--	--	--	--	--	--	--	--
P010	PUMP ROOM	--	--	--	--	--	--	--	--
P011	BOILER ROOM	--	--	--	--	--	--	--	--

SECTION 09000 - FINISH SCHEDULE

Room No. & Name	Floor Finish	Base	Walls: North	Walls: East	Walls: South	Walls: West	Ceiling	Remarks
P012 STAIR 1 - NORTH WEST	--	--	--	--	--	--	--	--
P013 PLUMBING ROOM	--	--	--	--	--	--	--	--
P014E ELEVATOR LOBBY	--	--	--	--	--	--	--	--
P014S STAIR LOBBY	--	--	--	--	--	--	--	--
P015 ELEVATOR MECHANICAL	--	--	--	--	--	--	--	--
P016 RESTROOM	--	--	--	--	--	--	--	--
P017 STORAGE	--	--	--	--	--	--	--	--
P018 RESTROOM								
P019 MAINTENANCE	--	--	--	--	--	--	--	--
P020 STAIR 3 - SOUTH EAST	--	--	--	--	--	--	--	
P021 MECHANICAL	--	--	--	--	--	--	--	--
P022 HOLDING TANK	--	--	--	--	--	--	--	--

SECTION 09000 - FINISH SCHEDULE

Room No. & Name	Floor Finish	Walls: Base	Walls: North	Walls: East	Walls: South	Walls: West	Ceiling	Remarks
P023A MECHANICAL SHAFT	--	--	--	--	--	--	--	--
P023B MECHANCIAL	--	--	--	--	--	--	--	
P024 MECHANICAL	--	--	--	--	--	--	--	--
P025 ELEVATOR SHAFT	--	--	--	--	--	--	--	--
P026 SERVICE ELEVATOR SHAFT	--	--	--	--	--	--	--	--
P027 NOT USED	--	--	--	--	--	--	--	--
P028 PARKING	--	--	--	--	--	--	APC-*	* New ceiling to match existing. Match existing as shown in A-102.
P029 RAMP	--	--	--	--	--	--	--	--
P030 MECHANICAL	--	--	--	--	--	--	PT-*	* Replace gypsum ceiling as required to perform work on level above. Paint to match existing.
P031 MECHANICAL	--	--	--	--	--	--	--	--
FIRST FLOOR								
P101 WASTE MANAGEMENT	CON-4	RB-2	FRP-1	PT-1 FRP-1	FRP-1	FRP-1	APC-4	--

SECTION 09000 - FINISH SCHEDULE

Room No. & Name	Floor Finish	Base	Walls: North	Walls: East	Walls: South	Walls: West	Ceiling	Remarks
P102 CUSTODIAL	CON-4	RB-2	FRP-1	FRP-1	--	FRP-1	APC-4	--
P103 WAITING - SOUTH	EM-1	RB-1	PT-1	STOREF.	STOREF.	PT-1	PT-2	--
P104 UNISEX RESTROOM	CT-2	--	CT-PAT*	CT-PAT*	CT-PAT*	CT-PAT*	APC-1	* See Interior Elevations for tile pattern
P105 UNISEX RESTROOM	CT-2	--	CT-PAT*	CT-PAT*	CT-PAT*	CT-PAT*	APC-1	* See Interior Elevations for tile pattern
P106 ELECTRICAL	CON-4	RB-2	PT-1	PT-1	PT-1	PT-1	APC-1	--
P107 HALL - WASTE	CON-4	RB-2	PT-1 FRP-1	PT-1 FRP-1	PT-1	PT-1 FRP-1	APC-1	* FRP-1 to 4'-0" A.F.F.
P108 NOT USED	--	--	--	--	--	--	--	--
P109 TENANT C	CON-5	--	Open Wall	Temp Wall*	Open Wall	Gyp. Bd.**	--	* Gyp Bd on mall side only ** Gyp Bd to be taped
P110 TENANT B	CON-5	--	Open Wall	Temp Wall*	Open Wall	Gyp. Bd.**	--	* Gyp Bd on mall side only ** Gyp Bd to be taped
P111 TENANT A - SUBWAY	--	--	--	--	--	--	--	--
P112 STAIR 1 - NORTH WEST	--	--	--	--	PT-*	--	--	* Touch up paint as required, match existing

SECTION 09000 - FINISH SCHEDULE

Room No. & Name	Floor Finish	Base	Walls: North	Walls: East	Walls: South	Walls: West	Ceiling	Remarks
P113 ENTRY - NORTH	EM-1	CTB-2	STOREF*	STOREF*	STOREF*	PT-2	APC-3 PT-PAT**	* Existing Storefront ** See Reflected Ceiling Plan for paint design
P114 STAIR 4 - NORTH EAST	CT-PAT*	CTB-4	--	--	--	--	--	* See Floor Finish Plan for floor tile design
P115 TENANT E - ROTUNDA	--	--	--	--	--	--	PT-PAT*	* See Reflected Ceiling Plan for paint design
P116 ATRIUM	CT-PAT*	CTB-1 CTB-2	--	--	PT-3 PT-2 WP-1	DM-1 PT-2 PT-1 WP-1	--	* See Floor Finish Plan for floor tile design
P117 ENTRY - EAST	EM-1	RB-1	--	--	--	--	--	--
P118 STAIR 3 - SOUTH EAST	--	--	--	--	--	--	--	--
P119 ENTRY - SOUTH	EM-1	RB-1	STOREF*	PT-1	STOREF*	STOREF**	APC-3 PT-PAT***	* Existing storefront ** New storefront *** See Reflected Ceiling Plan for paint design
P120 MALL	CT-PAT*	CTB-2 RB-1	--	PT-1 PT-2 PT-2	PT-1	PT-1 PT-2 PT-3	APC-2 PT-2** PT-3** PT-4**	* See Floor Finish Plan for tile pattern ** See Reflected Ceiling Plan for paint pattern

SECTION 09000 - FINISH SCHEDULE

Room No. & Name	Floor Finish	Base	Walls: North	Walls: East	Walls: South	Walls: West	Ceiling	Remarks
P121 ACCESSIBLE RAMP	CT-2	CTB-2	STOREF*	--	PT-2	STOREF*	APC-3 PT-PAT**	* Existing storefront ** See Reflected Ceiling Plan for paint design
P122 WAITING AREA - NORTH	CT-PAT*	CTB-2	--	--	--	P-1	APC-3 PT-PAT**	* See Floor Finish Plan for tile pattern ** See Reflected Ceiling Plan for paint design
P123 ELEVATOR CABS	CT-2 EM-1	CTB-2	--	--	--	--	--	--
P124 WAITING - EAST	CT-4	CTB-4	STOREF*	STOREF**	PT-2	PT-3	APC-3 PT-PAT***	* New storefront ** Existing storefront *** See Reflected Ceiling Plan for paint design
P125 WAITING PARA TRANSIT	CT-4	CTB-2	STOREF*	--	PT-2**	--	PT-2	* Existing storefront ** Stair 4
P126 NOT USED	--	--	--	--	--	--	--	--
P127 TRANSIT CENTER	CT-PAT*	CTB-1 CTB-2	--	STOREF**	PT-3	PT-2	APC-3 PT-PAT***	* See Floor Finish Plan for tile pattern ** Existing storefront *** See Reflected Ceiling Plan for paint design
P128 ELECTRICAL	--	--	--	--	--	--	--	--
P129 RAMP	--	--	--	--	--	--	--	--

SECTION 09000 - FINISH SCHEDULE

Room No. & Name		Floor Finish	Base	Walls: North	Walls: East	Walls: South	Walls: West	Ceiling	Remarks
P130	TENANT D	CON-5	--	Open Wall	Open Wall	Open Wall	Temp Wall*	--	* Gyp Bd on mall side only
P131	CUSTOMER SERVICE	CPT-1	RB-1	PT-2 STOREF PT-3**	PT-2	WP-1	PT-2 STOREF PT-3**	APC-1 DM-1*	* Soffit metal finish ** To be used below counter
P132	PHOTO ROOM	CT-1	CTB-1	STOREF	PT-2 STOREF	PT-3	DM-1 WP-1	DM-1* OPEN**	* Soffit metal finish ** Open to beyond as well
P133	REVENUE CLERK	CPT-1	RB-1	PT-1	PT-1	PT-1	PT-1	APC-1 PT-2*	*Soffit finish
P134	LEAD CUSTOMER SERVICE	CPT-1	RB-1	PT-1	--	PT-2	PT-2	APC-1	--
P135	CORRIDOR	CPT-1	RB-1	PT-1	PT-1	PT-1	PT-1	APC-1	--
P136	LOST & FOUND	CPT-1	RB-1	PT-1	PT-1	PT-1	PT-1	APC-1	--
P137	ACCOUNTING ROOM	CPT-1	RB-1	PT-1	PT-1	PT-1	PT-1	APC-1	--
P138	UNISEX RESTROOM	CT-2	CTB-2	CT-PAT*	CT-PAT*	CT-PAT*	CT-PAT*	APC-1	--
P139	NOT USED	--	--	--	--	--	--	--	--

SECTION 09000 - FINISH SCHEDULE

Room No. & Name	Floor Finish	Base	Walls: North	Walls: East	Walls: South	Walls: West	Ceiling	Remarks
P140 MEN'S RESTROOM	CT-PAT*	--	CT-PAT**	CT-PAT**	CT-PAT**	CT-PAT**	PT-3	--
P141 WOMEN'S RESTROOM	CT-PAT*	--	CT-PAT**	CT-PAT**	CT-PAT**	CT-PAT**	PT-3	--
SECOND FLOOR								
P201 STORAGE	CON-4	RB-1	PT-1	PT-1	PT-1	PT-1	--*	*Open to structure
P202 IT / DATA	--	--	--	--	--	--	--	--
P203 MEN'S RESTROOM	--	--	--	--	--	--	--	Toilet partitions and urinal screens to be painted PT-
P204 FAMILY RESTROOM	--	--	--	--	--	--	--	--
P205 WOMEN'S RESTROOM	--	--	--	--	--	--	--	Toilet partitions to be painited PT-
P206 CORRIDOR	--	CTB-3*	PT-1	PT-1 PT-2**	PT-1	PT-1	APC-1 PT-2	* Original base supplied by owner ** Elevator shaft
P207 STAIR 1 - NORTH WEST	--	--	--	--	PT-*	--	--	* Touch up paint as required, match existing
P208 JANITOR	--	--	--	--	--	--	--	--
P209 JANITOR	--	--	--	--	--	--	--	--

SECTION 09000 - FINISH SCHEDULE

Room No. & Name	Floor Finish	Base	Walls: North	Walls: East	Walls: South	Walls: West	Ceiling	Remarks
P210 WOMEN'S RESTROOM	--	--	--	--	--	--	--	--
P211 MEN'S RESTROOM	--	--	--	--	--	--	--	--
P212 STORAGE	--	--	--	--	--	--	--	--
P213 STORAGE	--	--	--	--	--	--	--	--
P214 CALL CENTER	--	--	--	--	--	--	--	--
P215 MANAGERS OFFICE	--	--	--	--	--	--	--	--
P216 OFFICE EXECUTIVE	--	--	--	--	--	--	--	--
P217 NOT USED	--	--	--	--	--	--	--	--
P218 EXECUTIVE SUITE	CPT-1	RB-1	PT-1	STOREF PT-1	PT-1	PT-1	APC-1	--
P219 GALLERY	CT*	CTB-4	PT-1 PT-2 PT-3	--	STOREF PT-2 PT-3	STOREF PT-2 PT-3	PT-PAT**	* Repair flooring as required ** See Reflected Ceiling Plan for paint design

SECTION 09000 - FINISH SCHEDULE

Room No. & Name	Floor Finish	Base	Walls: North	Walls: East	Walls: South	Walls: West	Ceiling	Remarks
P220 CORRIDOR	CT-PAT*	CTB-3 CTB-4	PT-1 PT-3	STOREF PT-1 PT-2 PT-3	--	PT-1 PT-3	APC-1 PT-PAT**	* See Floor Finish Plan for tile pattern ** See Reflected Ceiling Plan for paint design
P221 STAIR 3 - SOUTH EAST	--	--	--	--	--	--	--	--
P222 MEETING ROOM	--	--	--	--	--	--	--	--
P223 COMPUTER	--	--	--	--	--	--	--	--
P224 ELECTRICAL	--	--	--	--	--	--	--	--
P225 CALL CENTER	--	--	--	--	--	--	APC-1	--
P226 NORTH LANDING	CT-PAT*	CTB-2	PT-1	--	--	PT-1	PT-PAT*	* See Reflected Ceiling Plan for paint design
P227 NOT USED	--	--	--	--	--	--	--	--
P228 NOT USED	--	--	--	--	--	--	--	--
P229 NOT USED	--	--	--	--	--	--	--	--
P230 NOT USED	--	--	--	--	--	--	--	--

SECTION 09000 - FINISH SCHEDULE

Room No. & Name	Floor Finish	Base	Walls: North	Walls: East	Walls: South	Walls: West	Ceiling	Remarks
P231 NOT USED	--	--	--	--	--	--	--	--
P232 NOT USED	--	--	--	--	--	--	--	--
P233 NOT USED	--	--	--	--	--	--	--	--
P234 PAYTON BUILDING CONNECTION	--	--	--	--	--	--	--	--
P235 STAIR 4 - NORTH EAST	CT-PAT*	CTB-4	--	--	--	--	PT-PAT**	* See Floor Finish Plan for tile pattern ** See Reflected Ceiling Plan for paint design
P236 RAMP	CT-PAT*	CTB-4	--	PT-1 STOREF**	--	--	PT-PAT***	* See Floor Finish Plan for tile pattern ** New Storefront *** See Reflected Ceiling Plan for paint design
P237 NOT USED	--	--	--	--	--	--	--	--
P238 CORRIDOR	CT-PAT*	CTB-1 CTB-4	PT-2 PT-3 STOREF PT-1	PT-1	PT-1	PT-1	PT-PAT**	* See Floor Finish Plan for tile pattern ** See Reflected Ceiling Plan for paint design
P239 STA CENTER	CT-PAT*	CTB-4	PT-2 PT-3 STOREF	PT-2 PT-3 STOREF	RAIL**	RAIL**	PT-PAT***	* See Floor Finish Plan for tile pattern ** Insert new railing sections *** See Reflected Ceiling Plan for paint design

SECTION 09000 - FINISH SCHEDULE

Room No. & Name	Floor Finish	Walls: Base	North	East	South	West	Ceiling	Remarks
P240 NOT USED	--	--	--	--	--	--	--	--
P241 NOT USED	--	--	--	--	--	--	--	--
P242 NOT USED	--	--	--	--	--	--	--	--
P243 NOT USED	--	--	--	--	--	--	--	--
P244 NOT USED	--	--	--	--	--	--	--	--
P245 STORAGE	--	--	--	--	--	--	--	--
P246 HALL	--	CTB-3*	--	PT-**	--	--	PT-**	* Original base supplied by owner ** Match existing paint
P247 SUPERVISOR AREA	--	--	--	--	--	--	--	--
P248 BREAK ROOM	--	--	--	--	--	--	--	--
P248A CORRIDOR	--	--	--	--	--	--	--	--
P249 RECEPTION	--	--	--	--	--	--	--	--
P249A CORRIDOR	--	--	--	--	--	--	--	--

SECTION 09000 - FINISH SCHEDULE

Room No. & Name	Floor Finish	Base	Walls: North	Walls: East	Walls: South	Walls: West	Ceiling	Remarks
P250 OFFICE	--	--	--	--	--	--	--	--
P251 OFFICE	--	--	--	--	--	--	--	--
P252 CONFERENCE ROOM	--	--	--	--	--	--	--	--
P253 TRAINING AREA	--	--	--	--	--	--	--	--
P254 OFFICE	--	--	--	--	--	--	--	--
P255 OFFICE	--	--	--	--	--	--	--	--
P256 WORK ROOM	--	--	--	--	--	--	--	--
P257 NOT USED	--	--	--	--	--	--	--	--
P258 NOT USED	--	--	--	--	--	--	--	--
P259 NOT USED	--	--	--	--	--	--	--	--
P260 SECURITY SUITE - OPEN OFFICE	CPT-1	RB-2	PT-1	PT-1	PT-1	PT-1	APC-1	--
P261 UNISEX RESTROOM	CT-2	--	CT-PAT*	CT-PAT*	CT-PAT*	CT-PAT*	PT-2	* See A-411 for tile pattern

SECTION 09000 - FINISH SCHEDULE

Room No. & Name		Floor Finish	Base	Walls: North	East	South	West	Ceiling	Remarks
P262	INTERVIEW ROOM	VCT-1	RB-2	PT-2	PT-2	PT-2	PT-2	PT-1	--
P263	COORDINATOR OFFICE	CPT-1	RB-2	PT-1	PT-1	PT-1	PT-1	APC-1	--
P264	HALL - SECURITY	VCT-1* VCT-2* VCT-3*	RB-2	PT-2	PT-2	PT-2	PT-1 PT-2	APC-1	*Random pattern, see Floor Finish Plan
P265	NOT USED	--	--	--	--	--	--	--	--
P266	NOT USED	--	--	--	--	--	--	--	--
P267	NOT USED	--	--	--	--	--	--	--	--
P268	NOT USED	--	--	--	--	--	--	--	--
P269	NOT USED	--	--	--	--	--	--	--	--
P270	TENANT - F	CON-5	--	Open Wall*	Open Wall	--	Open Wall	--	* Painted Gyp Bd w reveals on atrium side only
P271	HALL	--	--	--	--	--	--	--	--
P272	NOT USED	--	--	--	--	--	--	--	--
P273	MECHANICAL	--	--	--	--	--	--	--	--

Spec. Section	Item	Keyword	Manufacturer	Description	Color / Finish
03 30 00	Concrete	CON-1	Concrete Habitat	Lightweight precast concrete panel Use: Cougar platform cladding	Color: #1002 Sawdust Finish: Polished
		CON-2	Davis Colors	Integral color concrete curb Use: Elevator art installation	Concrete Color: #677 Outback Stain Color: verify color w/ architect Finish: Polished
		CON-3	Davis Colors	Integral color concrete curb Use: Elevator art installation	Concrete Color: #8084 Light Gray Stain Color: verify color w/ architect Finish: Polished
		CON-4	--	Sealed Concrete Use: Floors	Color: Natural Finish: Sealed
		CON-5	--	Concrete Use: Floors	Color: Natural Finish: Non
05 00 00	Metal Specialties		Custom	Aluminum Metal Railing and Guardrail Use: Infill purpose where escalators are removed	Color: Match existing Finish: Match existing
05 70 00	Decorative Metal	DM-1	McNichols Industrial and Architectural Hole Products	Quality Round Perforated, 18 Gauge Galvanized Metal, ½" Round on 11/16" Staggered, 48.0000"x96.0000" Use: Atrium Area	Color: Natural Finish: Galvanized
06 64 00	Plastic Paneling	FRP-1	Marelite	Standard Fiberglass Reinforced Plastic Panels P-100 Sheet size: 4'-0" x 9'-0" Gauge: 3/32"	Color: White Finish: Pebbled
06 41 16	Plastic-Laminate-Faced Architectural Cabinets	PLAM-1	Formica	# 5274-58 Use: Casework Counters	Color: Geo Fossil Finish: Matte
		PLAM-2	WilsonArt Laminate	# 7960K-18 Use: Casework Verticals	Color: Studio Teak Texture: 18
		PLAM-3	WilsonArt Laminate	# D96-60 Use: Casework Interior	Color: Shadow Finish: 60
06 42 16	Flush Wood Paneling	WP-1	Custom	Quarter sawn natural cherry wood veneer Book Matched Use: Atrium Area	Color: Natural Cherry Finish: Clear Satin

SECTION 115000 - EQUIPMENT

PART 1 - GENERAL

1.1 SUMMARY

A. This section includes:

1. Illuminated Drum Clock.
2. Cash Drawer.
3. Keyboard Tray.
4. Intercom – Table Mount.
5. Mounting Bracket System for CAD/AVL Monitors Ceiling Mounted Type.
6. Flat Panel Swing Arm Wall Display Mount.
7. Monitor Pole Mount.

B. Related Sections include the following:

1. Division 6 Section “Plastic-Laminate-Faced Architectural Cabinets” for coordination with equipment to be built-in and supported.
2. Division 6 Section “Miscellaneous Rough Carpentry” for blocking.
3. Division 5 Section “Metal Fabrications”.
4. Division 12 Section “Quartz Agglomerate Countertops”

1.2 SUBMITTALS

A. Product Data: For each equipment item specified.

B. Shop Drawings: Anchorage details and wiring diagrams for electrically operated units.

PART 2 - GENERAL

2.1 ILLUMINATED DRUM CLOCK

A. Basis of Design: Americlock, Inc. 2240 Mason Lane, St. Louis, MO 63021, www.americlock.com, Phone (636)527-2277, Fax (636)527-3322.

B. Clock: Two 40” diameter double-sided aluminum drum clocks with custom mounting brackets. Clocks will come with vinyl roman numerals in the style of your choice which will be mounted on ¼” thick white acrylic dials. A custom wall bracket will hold the drum clocks in place and bolt to your frame. The two single sided clocks will be internally illuminated using energy efficient white LED lights that have a 50,000 hour life span. These lights will light up the clock efficiently without creating hotspots or shadows. Two (2) sets of hands of in the style of your choice will be properly reinforced and appropriately balanced, and primed and painted in the same color as the numerals. The hands will be driven by Two (2) type I231 self-starting electric

movements with stainless steel spindles and brass gears, and controlled by One (1) Tempus controller. The Tempus controller will regulate the clock movements with absolute accuracy. This Tempus controller is maintenance free, has a 10 year lifetime built-in lithium battery and corrects the time automatically after power outages, including Daylight Savings Time twice a year. The clock will be painted with a Polyeurethane acrylic paint to match any color.

2.2 CASH DRAWER

A. Basis of Design: Vasario 1313 Standard Duty with US Till. APG Cash Drawer, LLC 5250 Industrial Blvd. N.E., Minneapolis, NB 55421, sales@2pgcd.com, Phone (763)571-5000, Fax (763)571-5771.

2.3 KEYBOARD TRAY

A. Basis of Design: Banana Board by Workrite ergonomics, http://workriteergo.com/banana-board.

B. Complete System with removable memory foam insert, built-in document holder and cord manager. Includes Pinnacles 2 keyboard arm with maintenance-free 17" or 22" ball bearing track.

C. Color: Black.

2.4 INTERCOM – TABLE MOUNT

A. Basis of Design: TTU – 3/16" Continuous Power Unit Complete. Housing 6". Norcon Communications, Inc., 510 Burnside Ave, Inwood L.I., NY 11096, www.norcon.org, Phone (516)239-0300, Fax (516)239-8915.

2.5 MOUNTING BRACKET SYSTEM FOR MONITORS – CEILING MOUNTED TYPE

A. Basis of Design: Fusion Large Ceiling Back-to-Back 3x1 Menu Board by Chief Manufacturing of Milestone AV Technologies, www.chiefmfg.com, 6436 City West Parkway, Eden Prairie, MN 55344, Phone (800)582-6480, Fax (877)894-6918.

B. Mounting Bracket: Part # LCB3x1U. 2 each CMSO406 CMS Extension Columns at each location. 2 each CMA-372 Mount at each location.

2.6 FLAT PANEL SWING ARM WALL DISPLAY MOUNT

A. Basis of Design: Chief Manufacturing of Milestone AV Technologies, www.chiefmfg.com.

B. Mounting Bracket: Part # PNRUB.

2.7 MONITOR POLE MOUNT

A. Basis of Design: Chief Manufacturing of Milestone AV Technologies, www.chiefmfg.com.

B. Pole Mount: Model TPMU Universal 37-61" with Interface Bracket PSBU included. Weight capacity 150 lbs (69 kg), Color: black.

PART 3 - GENERAL

3.1 INSTALLATION

A. General: Install equipment at locations indicated to comply with manufacturer's written instructions.

B. Test equipment after installation to confirm that the item is fully functioning.

END OF SECTION 115000

SUBSTITUTION REQUEST FORM

SPOKANE TRANSIT AUTHORITY — PLAZA UPGRADE

TO:

We, the undersigned, have reviewed technical requirements for the above project and hereby submit for your consideration the following product instead of the specified item:

1. Section: 224000 Specified Item: P4-1 SERVICE SINK
2. Proposed substitution: KOHLER # K 6719-0
3. Reason for substitution: PRICE AND AVAILABILITY
4. Attachments:
   - Yes ✓ No __ Technical data, including laboratory tests, if applicable.
   - Yes ✓ No __ Complete information on changes to Drawings/Specifications which proposed substitution will require for proper installation.
   - Yes ✓ No __ Affects of substitution on Drawing dimensions.
5. Yes __ No ✓ The undersigned will pay for changes to the building and systems design, including engineering and detailing costs caused by the requested substitution.
6. Yes __ No. ✓ Does substitution have effect on other trades; describe:

7. Describe differences between proposed substitution and specified item:
   PLEASE SEE FOLLOWING SPECIFICATIONS
8. Yes ✓ No __ Maintenance and services parts will be as readily available as for specified item.
9. Yes ✓ No __ Manufacturer's guarantees of the proposed and specified items are the same, describe difference:
10. Yes __ No ✓ Sample of Proposed Substitution Submitted.

The undersigned further states that the function, appearance and quality of the proposed substitution are equivalent or superior to the specified item.

Submitted by:

Firm KELLER SUPPLY CO.
Address 601 N. FREYA
SPOKANE, WA. 99202
By DAVID STEVENS
(Signature and Title)
Date 8-13-15
Telephone 509-534-1541
Facsimile 509-535-5612

For use by Design Consultant:

Accepted __ Accepted as noted X
Not Accepted __ Received too late __
By JSR
Date 08/13/2015
Remarks Provide with adjustable trap

KELLER SUPPLY COMPANY

Fax Cover Sheet

Date: 8-13-15

Total Pages (including this one): 4

COFFMAN ENGINEERS Attn:

m: DAVID STEVENS Branch / Dept: SPOKANE

oject/Comments: SUBSTITUTION REQUEST

SPOKANE TRANSIT AUTHORITY – PLAZA UPGRADE

Seattle Branch	206.281.0884	Coeur d'Alene	208.667.9687	Monroe	360.794.1010
Corp./Purch.	206.284.8414	Commercial	206.340.1689	North Bend	425.888.5127
Accounts Payable.	206.286.1787	Credit	206.285.9352	Portland	503.232.5851
Advertising	206.749.0427	D.C,Spokane	509.535.5612	Puyallup	253.531.1095
Albany	541.926.8961	D.C,Sumner	253.826.4599	Redding	530.226.0746
Anchorage	907.349.2902	D.C,Vancouver	360.571.5034	Redmond	425.867.1529
Auburn	253.735.0427	Eugene	541.342.7868	Renton	425.271.6643
Beaverton	503.646.2018	Everett	425.339.2699	Salem	503.581.0082
Bellingham	360.647.2901	Fairbanks	907.452.8898	Sandpoint	208.265.8209
Boise	208.323.2244	Idaho Falls	208.523.8186	Sequim	360.681.4433
Bozeman	406.587.4066	International Sales	206.285.1680	Spokane	509.535.5612
Bend	541.385.9128	Kennewick	509.736.1022	Tacoma	253.473.7053
Billing/Pricing	206.283.5283.	Lacey	360.456.5835	Vancouver	360.696.0467
Billings	406.245.5507	Lynnwood	425.775.5422	Wenatchee	509.662.8913
Bremerton	360.479-0758	Medford	541.773.3050	Wilsonville	503.682.3082
Burlington	360.757.1166	Midvale	801.255.1934	Wasilla	907.373.0066
Chico	530.343.7277	Missoula	406.721.9076	Yakima	509.575.4968
Clackamas	503.653.6938				

KOHLER®

Bannon™
Service sink
K-6719

Features
- KOHLER® cast iron.
- Wall-mount.
- Rectangular basin.
- With rim guard.
- Acid-resistant enamel finish.
- Without overflow.
- Without faucet holes.
- 24" (610 mm) x 20-1/4" (514 mm)

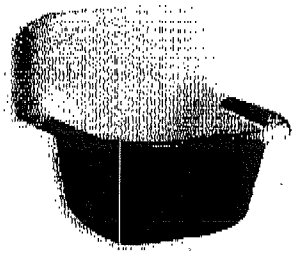

Recommended Accessories
6672
K-6673 Adjustable Trap
K-8906
8908

Components
Additional included component/s: Hangers, and stainless steel rim guard.

Codes/Standards
ASME A112.19.1/CSA B45.2

KOHLER® Lifetime Limited Warranty for Cast Iron Components
See website for detailed warranty information.

Available Color/Finishes
Color tiles intended for reference only.

Color	Code	Description
	0	White

KOHLER®

Bannon™
Service sink
K-6719

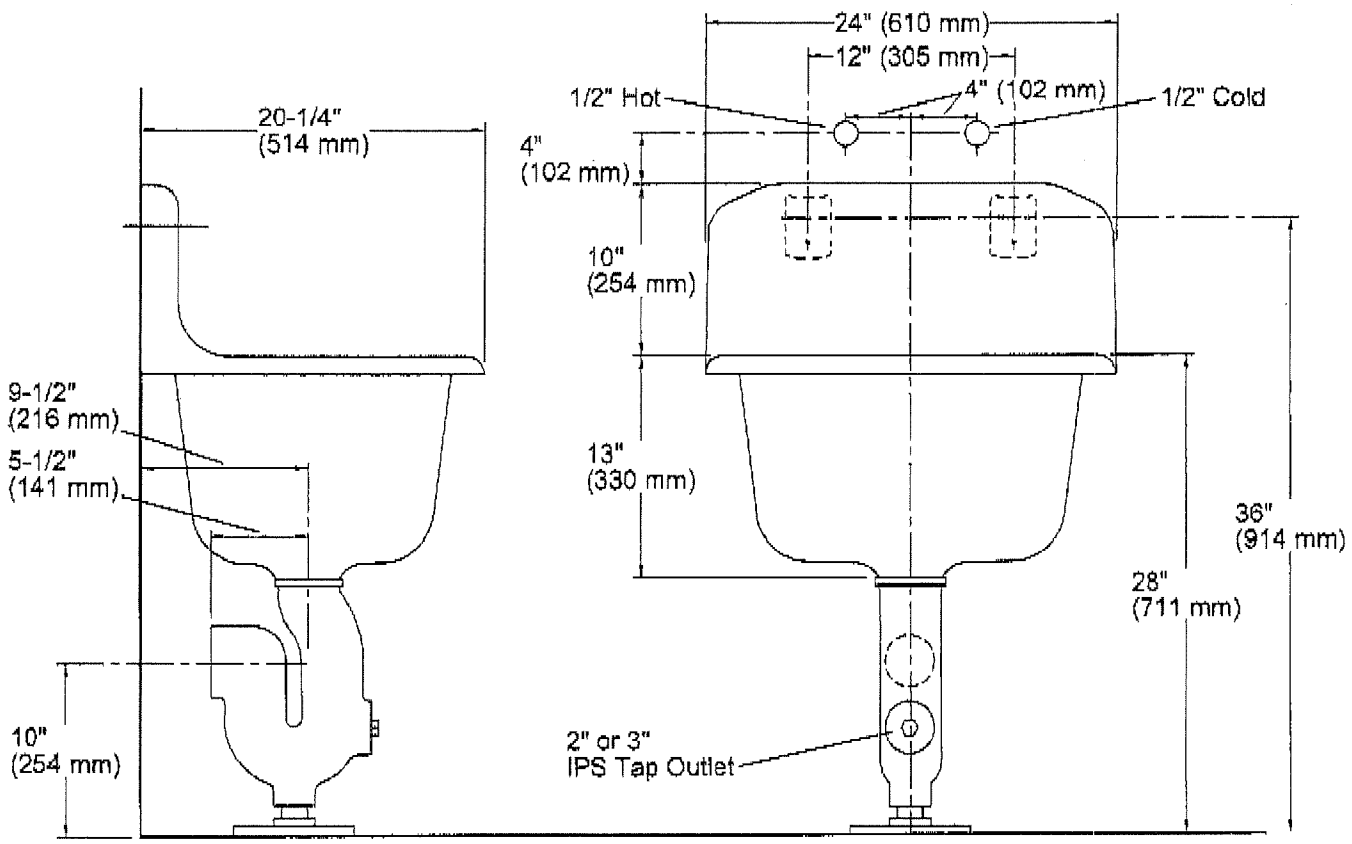

Technical Information

All product dimensions are nominal.

Bowl configuration:	Single
Installation:	Wall-mount
Bowl area (Only)	Width: 20" (508 mm) Bowl depth: 16" (406 mm) Water depth: 12" (305 mm)
Drain hole:	2-7/8" (73 mm)

Notes

Install this product according to the installation guide.

KELLER SUPPLY COMPANY

Fax Cover Sheet

Date: 8-10-15

Total Pages (including this one): 12

To: COFFMAN ENGINEERS Attn:

From: DAVID STEVENS Branch / Dept: SPOKANE

Subject/Comments: SUBSTITUTION REQUEST

SPOKANE TRANSIT AUTHORITY - PLAZA UPGRADE

Seattle Branch	206.281.0884	Coeur d'Alene	208.667.9687	Monroe	360.794.1010
Corp./Purch.	206.284.8414	Commercial	206.340.1689	North Bend	425.888.5127
Accounts Payable.	206.286.1787	Credit	206.285.9352	Portland	503.232.5851
Advertising	206.749.0427	D.C,Spokane	509.535.5612	Puyallup	253.531.1095
Albany	541.926.8961	D.C,Sumner	253.826.4599	Redding	530.226.0746
Anchorage	907.349.2902	D.C,Vancouver	360.571.5034	Redmond	425.867.1529
Auburn	253.735.0427	Eugene	541.342.7868	Renton	425.271.6643
Beaverton	503.646.2018	Everett	425.339.2699	Salem	503.581.0082
Bellingham	360.647.2901	Fairbanks	907.452.8898	Sandpoint	208.265.8209
Boise	208.323.2244	Idaho Falls	208.523.8186	Sequim	360.681.4433
Bozeman	406.587.4066	International Sales	206.285.1680	Spokane	509.535.5612
Bend	541.385.9128	Kennewick	509.736.1022	Tacoma	253.473.7053
Billing/Pricing	206.283.5283.	Lacey	360.456.5835	Vancouver	360.696.0467
Billings	406.245.5507	Lynnwood	425.775.5422	Wenatchee	509.662.8913
Bremerton	360.479-0758	Medford	541.773.3050	Wilsonville	503.682.3082
Burlington	360.757.1166	Midvale	801.255.1934	Wasilla	907.373.0066
Chico	530.343.7277	Missoula	406.721.9076	Yakima	509.575.4958
Clackamas	503.653.6938				

SUBSTITUTION REQUEST FORM

SPOKANE TRANSIT AUTHORITY - PLAZA UPGRADE

TO: COFFMAN ENGINEERS

We, the undersigned, have reviewed technical requirements for the above project and hereby submit for your consideration the following product instead of the specified item:

1. Section: 224000 Specified Item: P3-1 FAUCET
2. Proposed substitution: SLOAN 3315025 EBF650
3. Reason for substitution: PRICE AND AVAILABILITY
4. Attachments:
   - Yes ✓ No __ Technical data, including laboratory tests, if applicable.
   - Yes ✓ No __ Complete information on changes to Drawings/Specifications which proposed substitution will require for proper installation.
   - Yes ✓ No __ Affects of substitution on Drawing dimensions.
5. Yes __ No ✓ The undersigned will pay for changes to the building and systems design, including engineering and detailing costs caused by the requested substitution.
6. Yes __ No ✓ Does substitution have effect on other trades; describe:
7. Describe differences between proposed substitution and specified item: PLEASE SEE FOLLOWING SPECIFICATIONS
8. Yes ✓ No __ Maintenance and services parts will be as readily available as for specified item.
9. Yes ✓ No __ Manufacturer's guarantees of the proposed and specified items are the same, describe difference:
10. Yes __ No ✓ Sample of Proposed Substitution Submitted.

The undersigned further states that the function, appearance and quality of the proposed substitution are equivalent or superior to the specified item.

Submitted by:

Firm KELLER SUPPLY CO.
Address 601 N. FREYA
SPOKANE, WA. 99202
By DAVID STEVENS
(Signature and Title)
Date 8-7-15
Telephone 509-534-1541
Facsimile 509-535-5612

For use by Design Consultant:

Accepted X Accepted as noted __
Not Accepted __ Received too late __
By Langebartel
Date 8/12/15
Remarks

SLOAN®
OPTIMA SYSTEMS

OPTIMA® plus
Battery Powered Hand Washing Faucet

EBF-650 ←

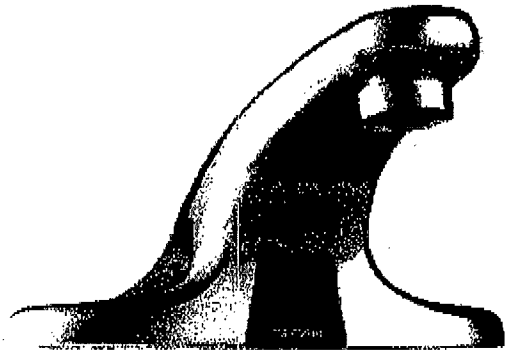

Description
Battery Powered, Sensor Activated, Chrome Plated Brass, 4" Centerset Electronic Hand Washing Faucet for tempered or hot/cold water operation.

Flow Rate
☐ 0.5 gpm/1.9 Lpm Vandal Resistant Spray Head
(See Accessories for other Spray Head options)

Specifications
ADA Compliant, Battery Powered, Sensor Activated, Chrome Plated Cast Brass, 4" Centerset Hand Washing Faucet with the following features:
- Splash-proof Circuit Control Module
- Sensor Range Adjustment Screw
- Low Battery LED Indicator Light
- User friendly Variable Time Out Settings
- Serviceable Filtered Solenoid Valve
- Bak-Chek® Tee for Hot/Cold Supply
- Vandal Resistant Spray Head with Pressure Compensating Flow Control
- Metal Jacketed Wire Protection for Sensor lead
- Includes four (4) AA-size Alkaline Batteries
- Appropriate Mounting Hardware included
- Optional 6 VDC Plug-In Adapter available (Batteries act as backup when using optional transformer)

Variations
(Add suffix to Model Number for inclusion with Faucet)

- **Trim Plate (Optional)**
  - ☐ **-8** Trim Plate for 8" Centerset Sink
- **Temperature Mixing Valves (Optional)**
  - ☐ **BDM** Below Deck Mechanical Mixing Valve
  - ☐ **BDT** Below Deck Thermostatic Mixing Valve

  Bak-Chek® Tee not required or provided when a Temperature Mixing Valve is included with the faucet.
- **Finishes (Optional)**
  - ☐ **PVDPB** Polished Brass (PVD Finish)
  - ☐ **PVDBN** Brushed Nickel (PVD Finish)
  - ☐ **PVDSF** Satin (PVD Finish)

Accessories (Specify separately)

- **Vandal Resistant Spray Heads**
  - ☐ **ETF-1029-A** 2.2 gpm/8.3 Lpm Laminar Flow Spray Head (recommended for medical applications)
  - ☐ **ETF-1024-A** 2.2 gpm/8.3 Lpm Aerator
- **Grid Strainer**
  - ☐ **ETF-460-A** Chrome Plated Brass Grid Strainer w/1¼" Outlet Tube
- **Adapter**
  - ☐ **SFP-6** 110 VAC/6 VDC Plug-In Adapter

See OPTIMA Accessories Section of the Sloan Catalog for a complete listing of OPTIMA Faucet Accessories and Variations.

Automatic
The Sloan OPTIMA Plus® EBF-650 Battery Powered Hand Washing Faucet activates by means of an infrared sensor. Once the user's hands enter the sensor's effective range, the solenoid activates the water flow. Tempered water flows from the faucet until hands are moved away. The faucet then automatically shuts off.

Hygienic
The ultimate in sanitary protection — there are no handles to turn or buttons to push. Helps to control the spread of infectious diseases. Ideal for high traffic commercial installations.

Economical
Automatic operation provides water usage savings over other faucet devices. Reduces maintenance and operation costs. The 4-inch centerset design makes the EBF-650 Faucet secure against abuse and vandalism. Battery powered ideal for retrofit installations. Optional plug-in adapter available.

Warranty
3 year (limited)

Compliant to:
ASME A112.18.1-2005/CSA B125.1-05
ISO/IEC 17025

LOW-LEAD UPC C ®

This product may contribute to LEED credits. See details on LEED calculation worksheet.

This space for Architect/Engineer approval

Job Name _____ Date _____

Model Specified _____ Quantity _____

Variations Specified _____

Customer/Wholesaler _____

Contractor _____

Architect _____

The information contained in this document is subject to change without notice.

EBF-650

Description
Battery Powered, Sensor Activated, Chrome Plated Brass, 4" Centerset Electronic Hand Washing Faucet for tempered or hot/cold water operation.

Flow Rate
☐ 0.5 gpm/1,9 Lpm Vandal Resistant Spray Head
(See Accessories for other Spray Head options)

ELECTRICAL SPECIFICATIONS

Control Circuit
6 VDC — operates on four (4) alkaline AA-size batteries.
Optional 6 VDC Plug-in Adapter.

Battery Life
2 years at 8,000 cycles/month

Indicator Lights
Range Adjustment/Low Battery

Solenoid Valve
Filtered Solenoid Valve with serviceable Strainer Filter

Optima® Sensor Range
Factory Set: 4" - 5"
(102 mm - 127 mm)
Adjustable: 2" - 7"
(51 mm - 178 mm)

Time Out Adjustment Settings
30 seconds — The Faucet Time Out Setting determines the maximum time the faucet will run upon continuous detection. The EBF-650 is factory set at the 30 second time out. Consult factory for time out settings to meet individual application requirements.

FAUCET DIMENSIONS

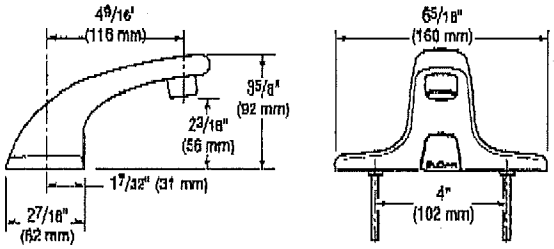

▶ **Max. Distance Control Module may be Installed from Spout**
With Standard Cable: 15" (381 mm)

OPERATION

1. A continuous invisible beam of light is emitted from the OPTIMA® Sensor located at the base of the lavatory faucet.

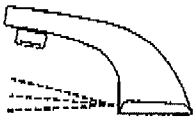

2. As the user's hands enter the beam's effective range, the beam is reflected back into the Sensor Receiver and activates the Solenoid Valve allowing tempered water to flow from the faucet. Water will flow until the hands are removed or until the faucet reaches its automatic time out limit setting.

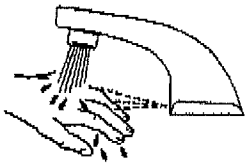

3. When hands are moved away from the OPTIMA® Sensor, the loss of reflected light initiates an electrical signal that deactivates the Solenoid Valve, shutting off the water flow. The Circuit then automatically resets and is ready for the next user.

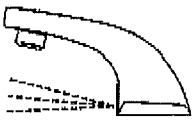

EBF-650 Faucet with Bak-Chek® Tee for Hot and Cold Water Supply

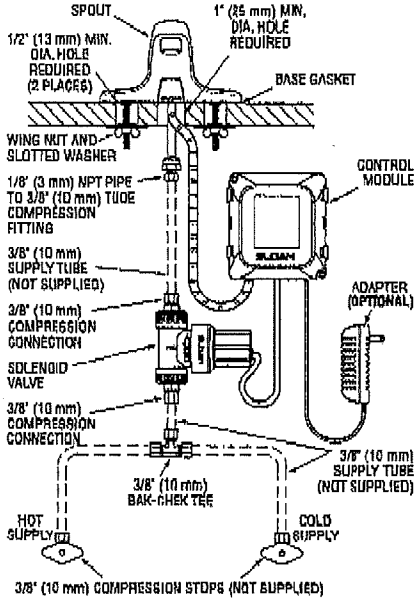

EBF-650 Faucet with BDM and BDT Variation Mixing Valves for Hot and Cold Water Supply

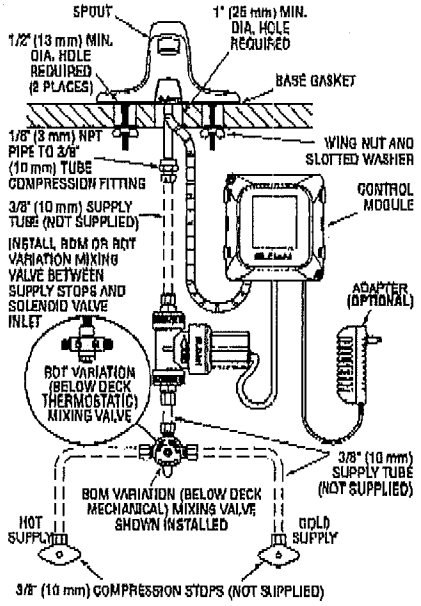

SLOAN HEADQUARTERS • 10500 SEYMOUR AVENUE • FRANKLIN PARK, IL 60131
Phone: 1-800-9-VALVE-9 or 1-847-671-4300 • Fax: 1-800-447-8329 or 1-847-671-4380 • www.sloanvalve.com

© 2012 Sloan Valve Company

SUBSTITUTION REQUEST FORM

SPOKANE TRANSIT AUTHORITY - PLAZA UPGRADE

TO: COFFMAN ENGINEERS

We, the undersigned, have reviewed technical requirements for the above project and hereby submit for your consideration the following product instead of the specified item:

1. Section: 224000 Specified Item: P1-1, P1-2 WATER CLOSET
2. Proposed substitution: SLOAN ZIOZ059 ST-2059-A
3. Reason for substitution: PRICE AND AVAILABILITY
4. Attachments:
   - Yes ✓ No __ Technical data, including laboratory tests, if applicable.
   - Yes ✓ No __ Complete information on changes to Drawings/Specifications which proposed substitution will require for proper installation.
   - Yes ✓ No __ Affects of substitution on Drawing dimensions.
5. Yes __ No ✓ The undersigned will pay for changes to the building and systems design, including engineering and detailing costs caused by the requested substitution.
6. Yes __ No. ✓ Does substitution have effect on other trades; describe:
7. Describe differences between proposed substitution and specified item: PLEASE SEE FOLLOWING SPECIFICATIONS
8. Yes ✓ No __ Maintenance and services parts will be as readily available as for specified item.
9. Yes ✓ No __ Manufacturer's guarantees of the proposed and specified items are the same, describe difference:
10. Yes __ No ✓ Sample of Proposed Substitution Submitted.

The undersigned further states that the function, appearance and quality of the proposed substitution are equivalent or superior to the specified item.

Submitted by:

Firm KELLER SUPPLY CO.
Address 601 N. FREYA
SPOKANE, WA. 99202
By DAVID STEVENS
(Signature and Title)
Date 8-7-15
Telephone 509-534-1541
Facsimile 509-535-5612

For use by Design Consultant:

Accepted X Accepted as noted __
Not Accepted __ Received too late __
By Langebartel
Date 8/12/15
Remarks

SLOAN®
Efficiency Series

Model
ST-2059-A Universal Closet
Top Spud Vitreous China Elongated Water Closet

DESCRIPTION

Complete vitreous china water closet.

Flush Cycle

Model ST-2059-A Universal Closet

(1.1 to 1.6 gpf/4.2 to 6.0 Lpf)

Code: 2102059

Flush volume is determined by the flushometer used with closet.

HET
HIGH EFFICIENCY TOILET

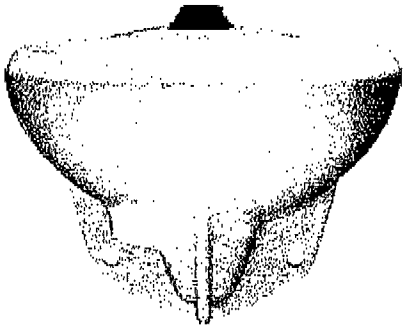

SPECIFICATIONS

Water Closet

- Wall hung vitreous china elongated bowl
- Siphon jet flushing action
- 1-1/2" I.P.S. top spud inlet
- 2-1/8" fully glazed trapway diameter
- Mounting hardware, carrier and toilet seat not included
- Integral flushing rim
- Water spot area 9 1/2" x 8 1/4"
- ASME A112.19.2/CSA B45.1

Colors/Finishes

- White

Recommended Seats

- Bemis - 1955CT/1955SSCT & 2155CT/2155SSCT
- Church - 295CT/295SSCT & 2155CT/2155SSCT

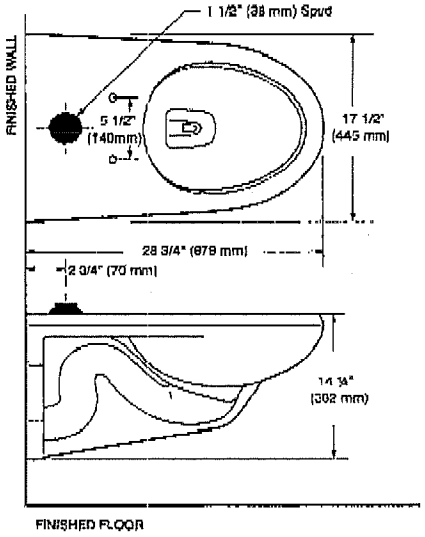

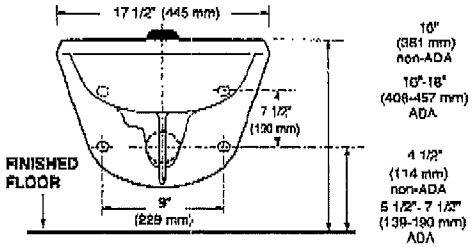

Designed to Meet ADA standards when bowl is 17" - 19" high including seat

* Please note that this model is fully interchangeable with Models: ST-2050-A, ST-2052-A, ST-2053-A and matches all dimensional and performance parameters.

** This model meets the requirements for a High Efficiency Toilet when used with a high efficiency flushometer (1.28 gpf/4.8 Lpf or 1.1/1.6 gpf-4.2/6.0 Lpf dual-flush).

Meets the American Disabilities Guidelines and ANSI A117.1 requirements when installed according to these requirements.

NOTE:
Plumbing System Requirements
√ Minimum **Flowing** Pressure: 25 PSI
√ Maximum Static Pressure: 80 PSI
√ Minimum Flow Rate: 18 gpm

NOTE: All vitreous china dimensions shown in these drawings are nominal. Dimensions can vary within the tolerances established in the governing ASME A112.19.2/CSA B45.1 standard. Please take this into consideration when planning rough-in and plumbing layouts.

Product Specification
Elongated water closet shall be made of vitreous china with a 1-½" top spud inlet. Bowl shall be ADA compliant when installed at required height of 17"-19" from floor to top of fixture (including seat). Water Closet shall be Sloan Model ST-2059-A.

GREEN **
UPC
Water Efficiency
Listed by IAPMO

This space for Architect/Engineer approval

Job Name _____ Date _____

Model Specified _____ Quantity _____

Variations Specified _____

Customer/Wholesaler _____

Contractor _____

Architect _____

The information contained in this document is subject to change without notice.

SLOAN®
Sloan
10500 Seymour Avenue
Franklin Park, IL 60131
Phone: 1-800-982-5839
Fax: 1-800-447-8329
www.sloanvalve.com

© 2013 Sloan Valve Company
ST-2059 10-13

SUBSTITUTION REQUEST FORM

SPOKANE TRANSIT AUTHORITY - PLAZA UPGRADE

TO: COFFMAN ENGINEERS

We, the undersigned, have reviewed technical requirements for the above project and hereby submit for your consideration the following product instead of the specified item:

1. Section: 224000 Specified Item: P1-1, P1-2 TOILET SEAT
2. Proposed substitution: BEMIS 1055-000
3. Reason for substitution: PRICE AND AVAILABILITY
4. Attachments:
   - Yes ✓ No __ Technical data, including laboratory tests, if applicable.
   - Yes ✓ No __ Complete information on changes to Drawings/Specifications which proposed substitution will require for proper installation.
   - Yes ✓ No __ Affects of substitution on Drawing dimensions.
5. Yes __ No ✓ The undersigned will pay for changes to the building and systems design, including engineering and detailing costs caused by the requested substitution.
6. Yes __ No. ✓ Does substitution have effect on other trades; describe:
7. Describe differences between proposed substitution and specified item: PLEASE SEE FOLLOWING SPECIFICATIONS
8. Yes ✓ No __ Maintenance and services parts will be as readily available as for specified item.
9. Yes ✓ No __ Manufacturer's guarantees of the proposed and specified items are the same, describe difference:
10. Yes __ No ✓ Sample of Proposed Substitution Submitted.

The undersigned further states that the function, appearance and quality of the proposed substitution are equivalent or superior to the specified item.

Submitted by:

Firm KELLER SUPPLY CO.

Address 601 N. FREYA

SPOKANE, WA. 99202

By DAVID STEVENS
(Signature and Title)

Date 8-7-15

Telephone 509-534-1541

Facsimile 509-535-5612

For use by Design Consultant:

Accepted X Accepted as noted __

Not Accepted __ Received too late __

By Langebartel

Date 8/12/15

Remarks

BEMIS COMMERCIAL

COMMERCIAL HEAVY-DUTY PLASTIC TOILET SEAT

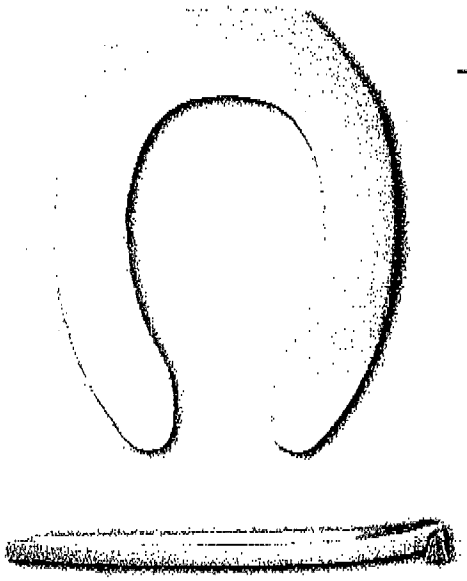

MODEL #	COLOR #
1055/1055SSC	WHITE

DESCRIPTION:

Open front less cover, elongated, heavy-duty, injection molded solid plastic toilet seat. Features two molded-in bumpers, non self-sustaining (1055) or self-sustaining (1055SSC) check hinges with non-corrosive 300 Series stainless steel posts, pintles and hardware. This seat complies with IAPMO/ANSI Z124.5-2013 Plastic Toilet Seats as a class Commercial Heavy Duty.

SPECIFICATIONS:

Size:	Elongated
Material:	Plastic
Style:	Open Front less Cover
Bumpers:	Two
Hinges:	Plastic Non Self-Sustaining (1055) or Self-Sustaining (1055SSC) with 300 Series Stainless Steel Posts and Pintles
Fastening System:	Non-Corrosive 300 Series Stainless Steel Nuts

FEATURES:

Non-Corrosive 300 Series Stainless Steel Posts, Pintles and Nuts

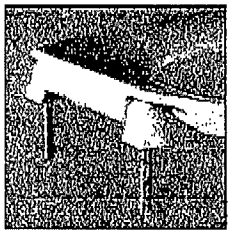

PLASTIC HINGES WITH STAINLESS STEEL POSTS AND PINTLES

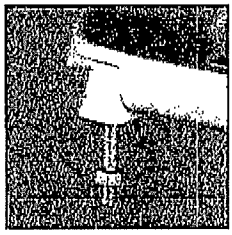

NON-CORROSIVE STAINLESS STEEL NUTS

DIMENSIONS:

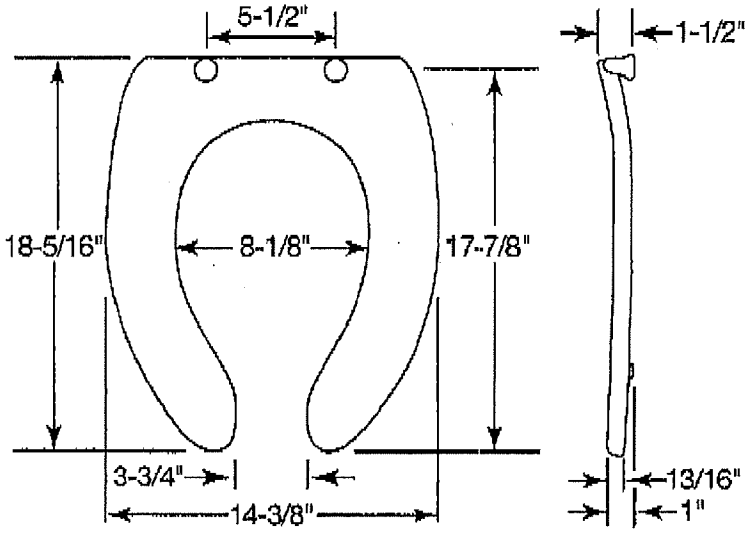

Proudly Made in the USA

Bemis Manufacturing Co., Sheboygan Falls, WI 53085
www.ToiletSeats.com

Phone: 800-558-7651 Fax: 800-292-3647

©2014 0B7012284 REVB

SUBSTITUTION REQUEST FORM

SPOKANE TRANSIT AUTHORITY - PLAZA UPGRADE

TO: COFFMAN ENGINEERS

We, the undersigned, have reviewed technical requirements for the above project and hereby submit for your consideration the following product instead of the specified item:

1. Section: 224000 Specified Item: PZ-1 URINAL
2. Proposed substitution: SLOAN 1101009 SU-1009-A
3. Reason for substitution: PRICE AND AVAILABILITY
4. Attachments:
   - Yes ✓ No __ Technical data, including laboratory tests, if applicable.
   - Yes ✓ No __ Complete information on changes to Drawings/Specifications which proposed substitution will require for proper installation.
   - Yes ✓ No __ Affects of substitution on Drawing dimensions.
5. Yes __ No ✓ The undersigned will pay for changes to the building and systems design, including engineering and detailing costs caused by the requested substitution.
6. Yes __ No ✓ Does substitution have effect on other trades; describe:
7. Describe differences between proposed substitution and specified item: PLEASE SEE FOLLOWING SPECIFICATIONS
8. Yes ✓ No __ Maintenance and services parts will be as readily available as for specified item.
9. Yes ✓ No __ Manufacturer's guarantees of the proposed and specified items are the same, describe difference:
10. Yes __ No ✓ Sample of Proposed Substitution Submitted.

The undersigned further states that the function, appearance and quality of the proposed substitution are equivalent or superior to the specified item.

Submitted by:

Firm KELLER SUPPLY CO.
Address 601 N. FREYA
SPOKANE, WA. 99202
By DAVID STEVENS (Signature and Title)
Date 8-7-15
Telephone 509-534-1541
Facsimile 509-535-5612

For use by Design Consultant:

Accepted X Accepted as noted __
Not Accepted __ Received too late __
By Langebartel
Date 8/12/15
Remarks

SLOAN®

Efficiency Series

Model

SU-1009-A Universal High-Efficiency Urinal

Top Spud Vitreous China Wash Down Urinal

DESCRIPTION

Complete vitreous china top spud urinal.

Flush Cycle

Model SU-1009-A*

(0.125 to 0.5 gpf/0.5 to 1.9 Lpf)

Code: 1101009

Flush volume is determined by the flushometer used with urinal.

HEU

HIGH-EFFICIENCY URINAL

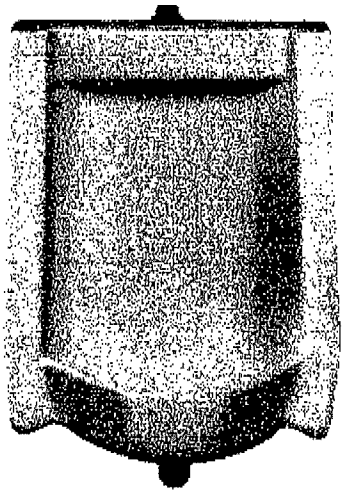

SPECIFICATIONS

Urinal

- Wall hung top spud vitreous china
- Washdown flushing action
- ¾" IPS top spud inlet
- 2" NPT outlet flange
- All mounting hardware included
- Integral flushing rim
- 100% factory flush tested
- Compliant to the applicable sections of ASME A112.19.2/CSA B45.1
- Carrier not included

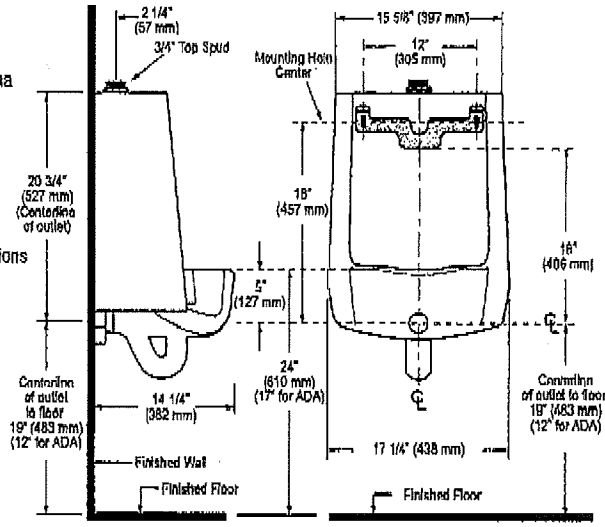

NOTE: All vitreous china dimensions shown in these drawings are nominal. Dimensions can vary within the tolerances established in the governing ASME A112.19.2/CSA B45.1 standard. Please take this into consideration when planning rough-in and plumbing layouts.

Product Specification

Washdown urinal shall be made of vitreous china with a ¾" top spud. Urinal shall have a 2" NPT outlet flange. Urinal shall include a removable strainer, inlet spud and hanger. Urinal shall shall be Sloan Model SU-1009-A.

*Please note that this model is fully interchangeable with Models SU-1000-A, SU-1002-A & SU-1005-A and matches all dimensional and performance parameters.

Meets the American Disabilities Guidelines and ANSI A117.1 requirements when installed at the proper height requirements for accessibility.

NOTE: Plumbing System Requirements

√ Minimum Flowing Pressure: 25 PSI

√ Maximum Static Pressure: 80 PSI

GREEN UPC Water Efficiency Listed by IAPMO

WaterSense Meets EPA Criteria

This space for Architect/Engineer approval

Job Name _____ Date _____

Model Specified _____ Quantity _____

Variations Specified _____

Customer/Wholesaler _____

Contractor _____

Architect _____

The information contained in this document is subject to change without notice.

SLOAN.

Sloan Headquarters
10500 Seymour Avenue
Franklin Park, IL 60131
Phone: 1-800-982-5839
Fax: 1-800-447-8329.
www.sloanvalve.com

© 2013 Sloan Valve Company

SUBSTITUTION REQUEST FORM

SPOKANE TRANSIT AUTHORITY - PLAZA UPGRADE

TO: COFFMAN ENGINEERS

We, the undersigned, have reviewed technical requirements for the above project and hereby submit for your consideration the following product instead of the specified item:

1. Section: 224000 Specified Item: P3-1 LAVATORY
2. Proposed substitution: SLOAN 3873003 SS-3003 W/ JR SMITH 0700 OR 0710 CARRIER
3. Reason for substitution: PRICE AND AVAILABILITY
4. Attachments:
   - Yes ✓ No __ Technical data, including laboratory tests, if applicable.
   - Yes ✓ No __ Complete information on changes to Drawings/Specifications which proposed substitution will require for proper installation.
   - Yes ✓ No __ Affects of substitution on Drawing dimensions.
5. Yes __ No ✓ The undersigned will pay for changes to the building and systems design, including engineering and detailing costs caused by the requested substitution.
6. Yes __ No ✓ Does substitution have effect on other trades; describe:
7. Describe differences between proposed substitution and specified item: PLEASE SEE FOLLOWING SPECIFICATIONS
8. Yes ✓ No __ Maintenance and services parts will be as readily available as for specified item.
9. Yes ✓ No __ Manufacturer's guarantees of the proposed and specified items are the same, describe difference:
10. Yes __ No ✓ Sample of Proposed Substitution Submitted.

The undersigned further states that the function, appearance and quality of the proposed substitution are equivalent or superior to the specified item.

Submitted by:

Firm KELLER SUPPLY CO.
Address 601 N. FREYA
SPOKANE, WA. 99202
By DAVID STEVENS (Signature and Title)
Date 8-7-15
Telephone 509-534-1541
Facsimile 509-535-5612

For use by Design Consultant:

Accepted X Accepted as noted __
Not Accepted __ Received too late __
By Langebartel
Date 8/12/15
Remarks

SLOAN®

Model
SS-3003 Series
Standard Wall Hung Lavatory with Backsplash

DESCRIPTION

Complete vitreous china lavatory with backsplash

- ☐ Model SS-3103-Single Hole
  Code: 3873103
- ☐ Model SS-3003-4" (102 mm) Centers
  Code: 3873003
- ☐ Model SS-3803-8" (203 mm) Centers
  Code: 3873803

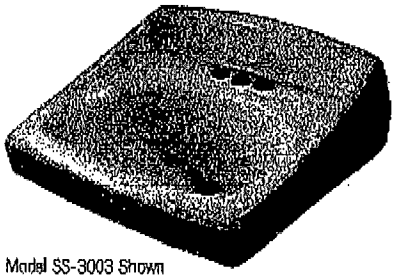

Model SS-3003 Shown

SPECIFICATIONS

Lavatory

- White vitreous china
- Wall mount
- Hanging hardware
- Backsplash
- Single hole, 4" (102 mm) and 8" (203 mm) centers
- Front overflow
- ADA compliant when mounted with deck at 34" from finished floor. See illustration for recommended ADA installation
- 20.75" (527 mm) x 18.25" (464mm)
- Compliant to the applicable sections of ASME A112.19.2/CSA B45.1
- Carrier not included

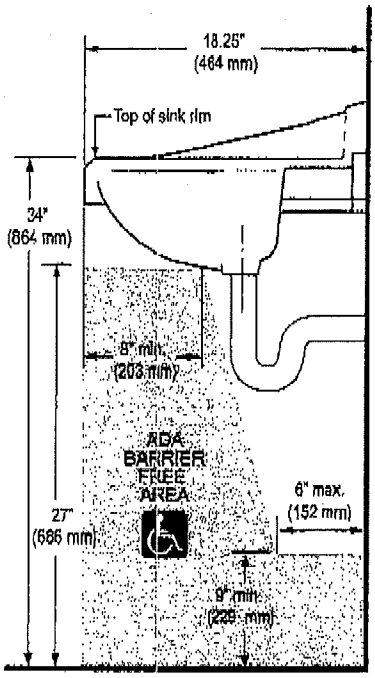

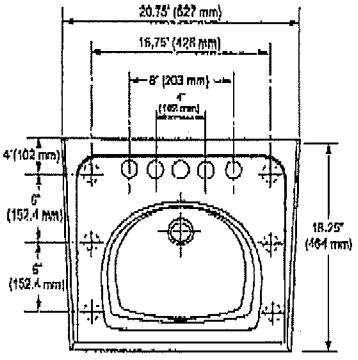

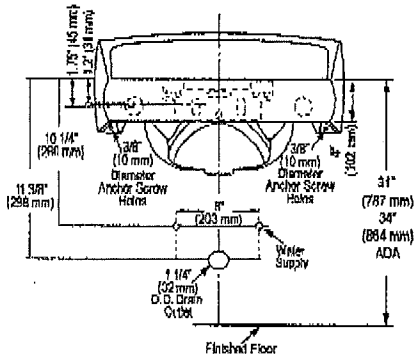

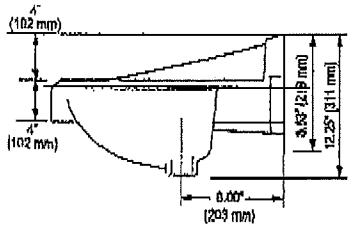

Product Specification
Sink shall be made of vitreous china. Sink shall be wall mounted. Sink shall have an overflow. Sink shall be a 4" centerset. Sink shall be Sloan Model SS-3_03.

NOTE: All vitreous china dimensions shown in these drawings are nominal. Dimensions can vary within the tolerances established in the governing ASME A112.19.2/CSA B45.1 standard. Please take this into consideration when planning rough-in and plumbing layouts.

UPC C ® Water Efficiency

This space for Architect/Engineer approval

Job Name _____ Date _____

Model Specified _____ Quantity _____

Variations Specified _____

Customer/Wholesaler _____

Contractor _____

Architect _____

The information contained in this document is subject to change without notice.

SLOAN.
Sloan Valve Company
10500 Seymour Avenue
Franklin Park, IL 60131
Phone: 1-800-9-VALVE-9 (982-5839)
or 1-847-671-4300
Fax: 1-800-447-8329 or 1-847-671-4380
www.sloanvalve.com

Copyright © 2013 Sloan Valve Company
SS-3003 09-13

SUBSTITUTION REQUEST FORM

TO Coffman Engineers

PROJECT Spokane Transit Authority Plaza Upgrade

1. We hereby submit for your consideration the following product instead of the specified item for the above project:

Section	Page	Line/Paragraph	Specified Item
238100	2	2.1	Split-System Air Conditioners

2. Proposed Substitution: LG

3. Reason for Substitution: To provide a more competitive project

4. Attach complete technical data, including laboratory tests, if applicable.

5. Include complete information on changes to Drawings and/or Specifications which proposed substitution will require for its proper installation.

6. Does the substitute affect dimensions shown on Drawings? No

6a. If so, how?

7. Will the undersigned pay for changes to the building and systems design, including engineering and detailing costs caused by the requested substitution? YES

8. Describe the effect substitution has on other trades: None

9. Differences between proposed substitution and specified item:

10. Manufacturer's guarantees of proposed and specified items are: ☑ Same ☐ Different (explain on attachment)

The undersigned states that the function, appearance and quality are equivalent or superior to the specified Item.

SUBMITTED BY:

Signature

Firm Mechanical Sales, Inc.

Mailing Address 2214 East Riverside Ave

City State Zip Spokane, WA 99202

Telephone 509 327 7395

Date 8/7/2015

☑ Please check if there are attachments.

FOR USE BY REVIEWER:

☒ Accepted ☐ Accepted as Noted

☐ Not Accepted ☐ Received Too Late

☐ Approved for Bidding subject to review and approval of Submittals.

By Langebartel

Date 8/12/15

Remarks

***** Answer all questions ***** Fill in all blanks ***** Use back of form & attachments as needed *****

Coffman Engineers
AUG 11 2015
Received

LG Duct-Free Split systems

Precise climate control

Made easy

Control you never thought possible in every room of your home.

Home Comfort Solutions by LG are Duct-Free Split systems that allow you to cool or heat your entire home or just a single room without the need for invasive ductwork. There's no tearing down of walls or altering your home's appearance. LG Duct-Free Split systems are simple to have installed. In most cases, a professional contractor gets the job done in less than a day.

How LG Duct-Free Split systems work

LG Duct-Free Split air-conditioning and heating systems consist of three basic components: an inverter-driven outdoor unit, a stylish and quiet indoor unit that delivers conditioned air to the room, and compact conduit for refrigerant lines and wiring that connects the units. This design allows for energy conservation by targeting only those areas that need cooling or heating, a cost-effective feature when only certain portions of a building are being used.

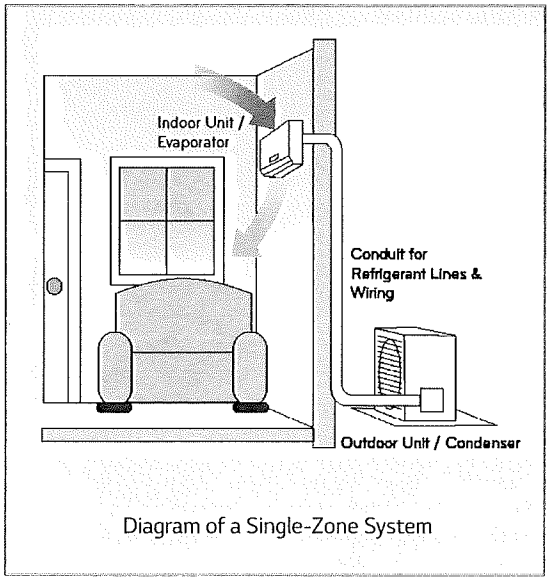

Diagram of a Single-Zone System

LG Duct-Free Split systems can be used virtually anywhere

LG delivers advanced climate control and operating efficiency to a wide range of residential and light commercial projects, from a stuffy bedroom to a home addition where cooler temperatures are required.

Applications may include:

- Older homes
- Sunrooms
- New home constructions
- Room additions
- Bedrooms
- Home offices
- Basements
- Kitchens
- Attics
- Garages

LG Duct-Free Split systems bring comforting innovation

Benefits of Duct-Free Split systems

- Reduced energy costs—LG's evolved technology can make a difference in cooling and heating bills
- Incredibly quiet—With advanced motor and fan designs, LG units operate at low sound levels
- Custom temperature control—Precise temperature settings in each zone
- Beautiful design—Variety of elegant looks to complement any decor
- Enhanced air circulation—Electronically controlled louvers and fan speeds designed to keep room temperatures consistent
- High-speed cooling—Powerful Jet Cool setting quickly lowers the temperature of warm rooms
- Dependable heating—An excellent source of primary or supplemental heating in the cooler months
- Built to last—LG's commitment to quality means years of dependable comfort
- Convenient controls—All indoor units include a handheld or a wall-mounted controller

The advantages of inverter technology

Inverter variable-speed outdoor units are measurably quieter and use less energy than conventional air conditioners. Unlike conventional air conditioners that cycle on and off, an inverter compressor ramps up or down to match the capacity and maintain comfort levels.

SEER: Your guide to cool savings

An acronym for Seasonal Energy Efficiency Ratio, SEER is the industry-wide rating measurement that conveys energy consumption information to consumers. The higher the number, the more efficiently a product will produce cool air...and operating efficiency is a big step in conserving our natural resources. Your contractor will be happy to explain SEER numbers in greater detail, and help you determine which LG Duct-Free Split system is best for your unique requirements.

HSPF: For cost-saving coziness

Heating Seasonal Performance Factor, or HSPF, represents the total heating output when compared to the electricity used. Like SEER, the higher the HSPF rating, the more efficiently a product will produce warm air. If you live in a climate that requires heating in the winter months, as well as cooling in the summer, ask your contractor to determine the ideal Duct-Free Split system for you.

One room, wonderful solutions... single-zone systems

Who needs ductwork?

Are you planning a new room addition? Do you have a space that never gets cool enough, like the bonus room over your garage? Or warm enough, like the sunroom in the fall? In the past, homeowners have turned to window units, or faced the expense of enlarging their central air-conditioning system. Now, there's a proven solution to cool or heat any room — an LG single-zone Duct-Free Split system.

Benefits of single-zone Duct-Free Split systems

- Available in a full range of capacities for all room sizes
- More energy efficient than window units and central air-conditioning systems
- All-season use—heat pump models have both cooling and heating capabilities
- Quiet operation, inside and out
- Usually installed in less than a day
- Many units are ENERGY STAR® rated
- Twelve models were awarded the ENERGY STAR® Most Efficient designation for 2014

LEARN MORE AT energystar.gov

ENERGY STAR® is a joint program of the U.S. Environmental Protection Agency (EPA) and the U.S. Department of Energy (DOE) created to promote energy-efficient products and practices. The ENERGY STAR® logo helps homeowners identify which products meet energy efficiency performance levels set by U.S. EPA and U.S. DOE.

Style and substance... single-zone indoor units

Many styles, many choices

There's no need to compromise when it comes to comfort. LG Duct-Free Split single-zone systems offer many styles of indoor units to enhance any decor, plus performance that lets you enjoy every room to the fullest. And they're available in a full range of capacities to perfectly match any size space, large or small. Whether you need cooling or heating, LG offers the perfect Duct-Free Split performance package.

up to 27.5 SEER

Art Cool™ Premier

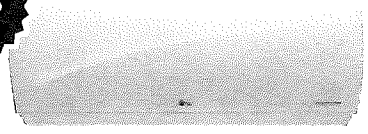

Supreme Efficiency
Wall-Mounted Indoor Units

ENERGY STAR

up to 21.5 SEER

Standard

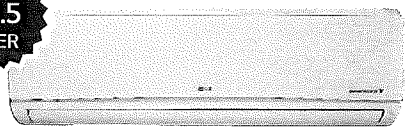

High Efficiency
Wall-Mounted Indoor Units

ENERGY STAR

up to 20.0 SEER

Ceiling Cassette

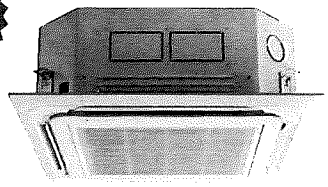

Indoor Units

up to 21.0 SEER

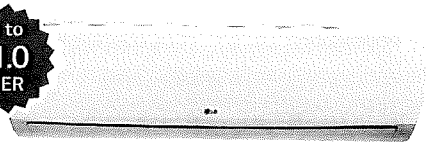

Extended Pipe Wall-Mounted
Indoor Units

ENERGY STAR

up to 20.5 SEER

Art Cool™ Mirror

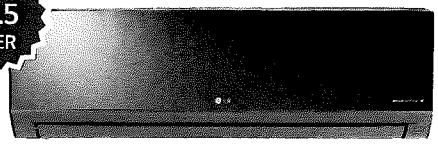

High Efficiency
Wall-Mounted Indoor Units

ENERGY STAR

up to 17.0 SEER

Mega Standard

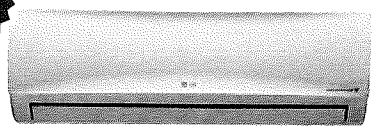

Wall-Mounted Indoor Units

up to 17.6 SEER

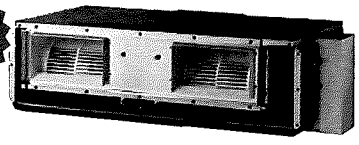

Ceiling Concealed Duct (High Static)

Uniquely LG. It looks like a work of art—and it is!

up to 16.0 SEER

The ingenious **Art Cool™ Gallery Inverter Indoor Unit** cools and warms with world-class efficiency...and flair. Frame any artwork or photo (20 x 20 inches or smaller) that you wish to display. And changing images couldn't be easier.

ENERGY STAR

The more rooms the better with Multi F systems

One LG inverter-driven multi-zone outdoor unit can support two, three, four, or up to eight indoor units, providing personalized cooling and heating for an entire home. Compact refrigerant pipes work in tandem with wiring to link the outdoor unit with all indoor units, either directly or through a branch distribution (BD) unit (Multi F MAX systems).

Multiple rooms add up to multiple benefits

- Long refrigerant piping lengths allow for extra design flexibility in indoor unit installation
- Each indoor unit includes its own controller
- Indoor units are available in a full range of capacities for all room sizes
- Easy installation: little to no ductwork required; most indoor units can mount on any wall
- Indoor unit and outdoor unit dimensions ensure space-saving convenience
- All-season use—heat pump models have both cooling and heating capabilities

up to 21.0 SEER

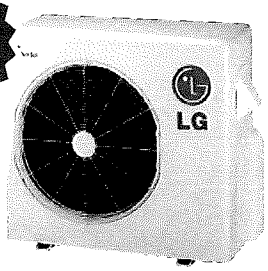

Dual-Zone Multi F Outdoor Units

LMU187HV

ENERGY STAR

up to 21.7 SEER

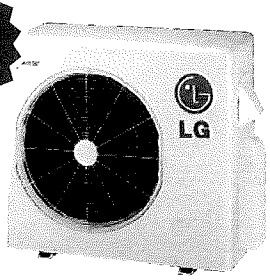

Tri-Zone Multi F Outdoor Units

LMU247HV

ENERGY STAR

up to 17.5 SEER

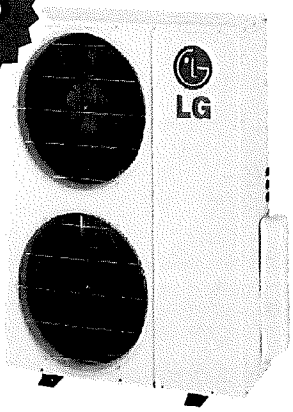

Quad-Zone Multi F Outdoor Units

LMU369HV

ENERGY STAR

up to 18.4 SEER

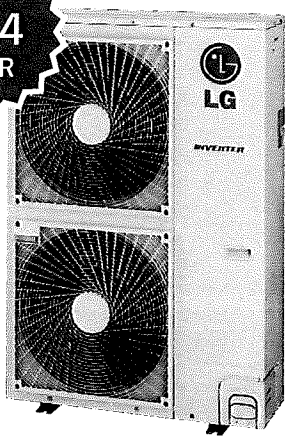

Eight-Zone Multi F MAX Outdoor Units

LMU540HV

The more rooms the better with Multi F systems

Multi F systems have multiple indoor units

Select from a variety of sleek, elegant indoor units to complement any decor. And the choice is not limited to one type of indoor unit per system—mix and match according to function and style!

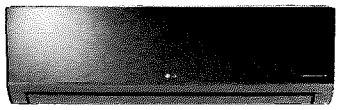

Multi F Art Cool™ Mirror Wall-Mounted Indoor Units

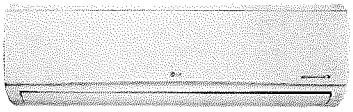

Multi F Standard Wall-Mounted Indoor Units

Art Cool™ Gallery Inverter Indoor Units

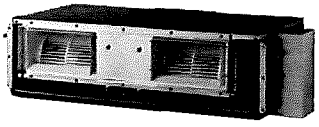

Ceiling Concealed Duct (High Static)

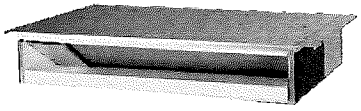

Multi F Ceiling Concealed Ducted Indoor Units

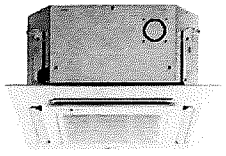

Multi F Ceiling Cassette Indoor Units

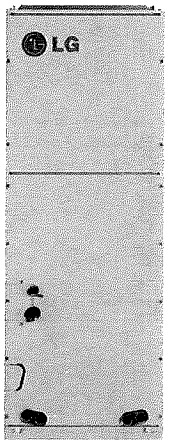

Multi F Vertical-Horizontal Air Handling Unit

Make yourself at home...diagram of a Multi F multi-zone system

1. One outdoor condensing unit (Multi F MAX system) can support up to eight indoor units.
2. An Art Cool™ Mirror indoor unit shines in the dining room.
3. A ceiling cassette indoor unit in the living room—the look preferred by many homeowners.
4. Standard wall-mounted indoor units in the master and second bedrooms. Precise comfort in your personal retreat.

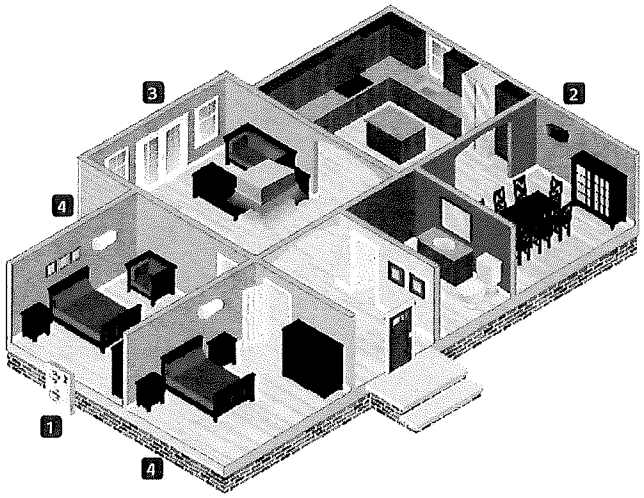

Convenient remote controls simplify all setting functions. Many remote controls can also be wall mounted.

LG

Life's Good

Visit LGHomeComfort.com.
Our site is an excellent resource for information, and it's where you'll find the LG Trained Contractors in your area.

LG Electronics U.S.A., Inc. HVAC Division
11405 Old Roswell Road, Alpharetta, GA 30009

© 2014 LG Electronics U.S.A., Inc., Englewood Cliffs, NJ. All rights reserved. LG Life's Good is a registered trademark of LG Corporation.

DFS-PB-AE-002-US 014F06